Selbststudienprogramm

8

Self-Study Program

Automatic
transmission for
Volkswagen and Audi

Automatik Getriebe für Volkswagen und Audi

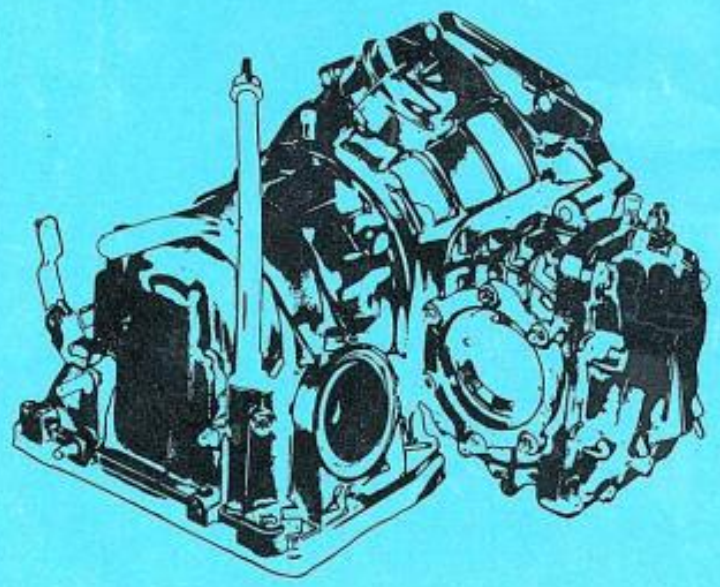

Volkswagenwerk AG
Personalentwicklung und Schulung

Kennen Sie das automatische Getriebe 010?

Do you know the automatic transmission 010?

In this self-study program, you'll learn what you need to know about the
-construction
-about function.
In addition to the introductory pages on the operation and structure of the automatic transmission, this booklet contains three chapters:
Torque converter and planetary gear
final drive transmission control

Neben den einleitenden Seiten
über die Bedienung und den Aufbau des automatischen Getriebes
enthält dieses Heft drei Kapitel:

- Drehmomentwandler und Planetengetriebe
- Achsantrieb
- Getriebesteuerung

Jedes dieser Kapitel hat eine bestimmte Farbe,
die Sie auch immer bei den Bauteilen des automatischen Getriebes finden,
die in dem entsprechenden Kapitel behandelt werden.

Dadurch können Sie sich in diesem Heft
immer leicht zurechtfinden.

Each of these chapters has a specific color, which you will always find in the components of the automatic gearbox, which are covered in the relevant chapter.
This will allow you to look into this booklet always easy to navigate.

If you're a mechanic or a KD consultant [ed. Service Advisor?], all you need to do is work through the first two chapters. The chapter about transmission control is mainly addressed to specialists.
As you work through, read each chapter carefully and read page by page. Then you will learn how the automatic transmission is built and how it works.
You already know this sign from the self-study programs "the Scirocco" and "the Golf". You will also find it in this issue in some places. It refers you to the repair group 37, where you can find the exact setting instructions in the repair thread.

Leitfaden
37

Dieses Zeichen kennen Sie schon
aus den Selbststudienprogrammen
„der Scirocco" und „der Golf".
Sie finden es auch in diesem Heft an einigen Stellen.
Es verweist Sie auf die Reparaturgruppe 37,
unter der Sie im Reparaturleitfaden
die genauen Einstellanweisungen finden.

Einführung und Bedienung

Introduction and Operation

The automatic transmission 010 is a hydraulically controlled three-speed transmission with upstream hydrodynamic torque converter. All gears are automatically switched within the selected driving range. It differs from the automatic transmission 003 by,
-two-separate planetary gear sets
-a mechanical control
-a multi-disc brake for 1st gear and reverse gear
-and parallel shafts for the final drive.

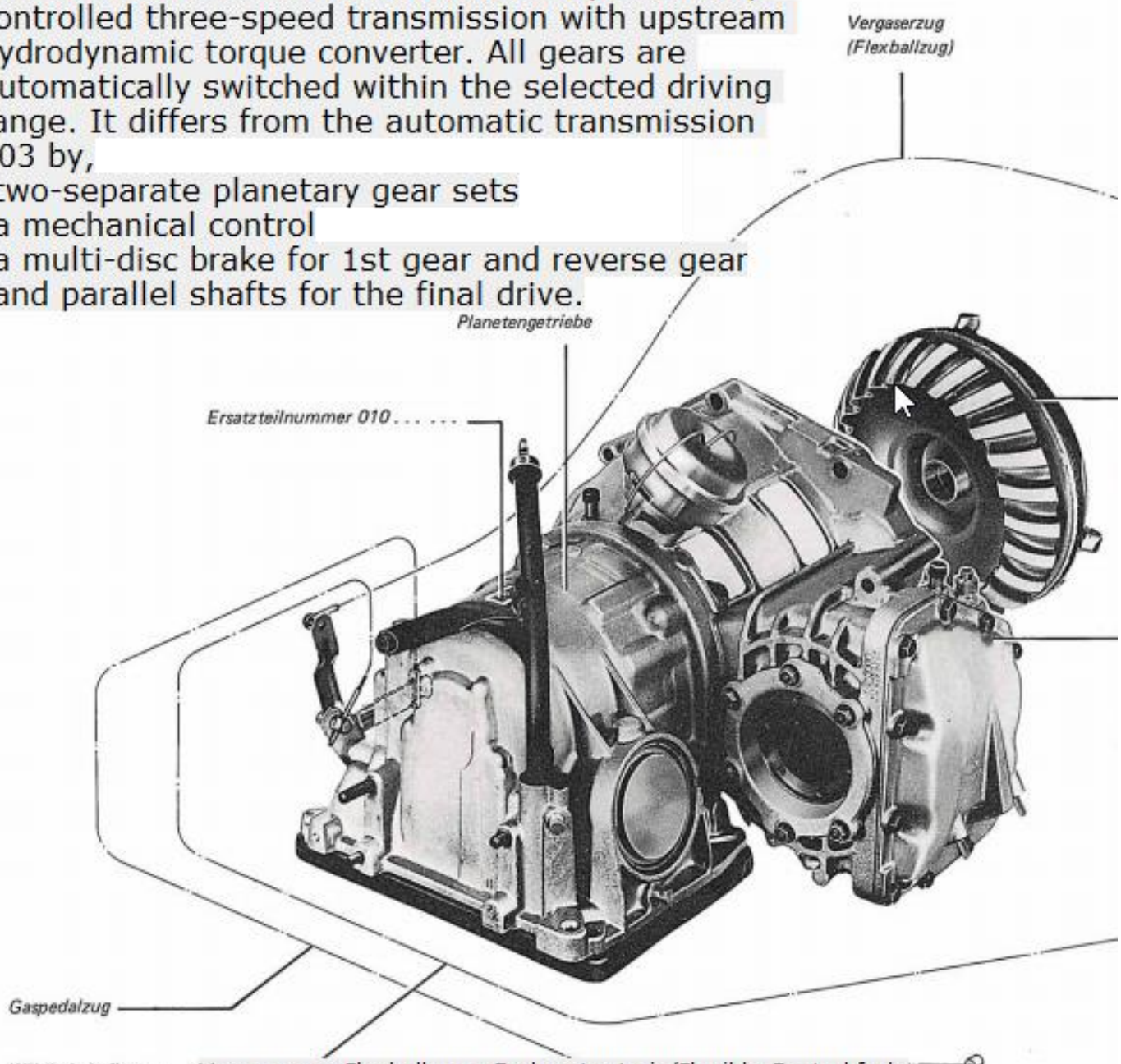

Vergaserzug Flexballzug - Carburetor train/Flexible Control [ed. Different power plants?]
Planetengetriebe - Planetary gear
Ersatzteilnummer 010..... - Spare part number
Gaspedalzug - Accelerator Pedal
Wählhebelseilzug - Selector Lever

Wählhebelseilzug, Vergaserzug und Gaspedalzug müssen eingestellt werden

Leitfaden
37/22

Selector lever cable, carburetor cable, and accelerator cable must be adjusted

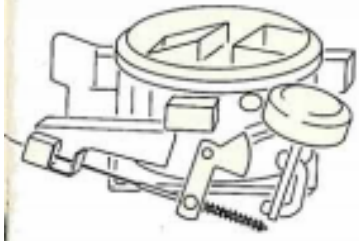

Drehmomentwandler

Achsantrieb

With the selector lever following driving ranges can be selected:
P- Park; the vehicle is blocked.
R- Reverse driving range.
N- Neutral; no power transmission.
D- forward driving range; all three forward gears automatically switch off.
2- forward driving range; 1st and 2nd go automatically.
1- forward driving range; only 1st gear.
The selector lever positions P, R, and 1 are mechanically locked. The lock is released by pressing the side button on the selector lever.

Anlassen

Starting The engine can only be started in P or N.

Wählen

Select The selection of one of the driving ranges D, 2, 1, or R may only be carried out at idle speed of the engine when the vehicle is stationary. While driving, the selector lever - also with gas from D in 2 can be placed, but only below 71mph [115km/h]. the position 1 may only be inserted below 40mph [65km/h]; To do this, the lock key must be pressed.

Kick-down

Kick down By pushing the accelerator pedal beyond the full throttle position, the shift points are shifted upwards. Below a fixed speed, a forced shift back into the gear that is most favorable for the acceleration is achieved.

Anschieben

Pushing Starting It is not possible to start the engine by pushing or towing on this automatic gearbox because the required control oil pressure is only generated by the gear pump when the engine is running.

Abschleppen

Towing Towing the vehicle with automatic gearbox can take place in position N. The speed must not be higher than 31mph [50km/h] and the distance not greater than 31 miles [50km]. For larger distances, the car must be raised in front, because with the engine stopped the lubrication the rotating gear parts therefore those parts may fail.

Automatisches Getriebe 010

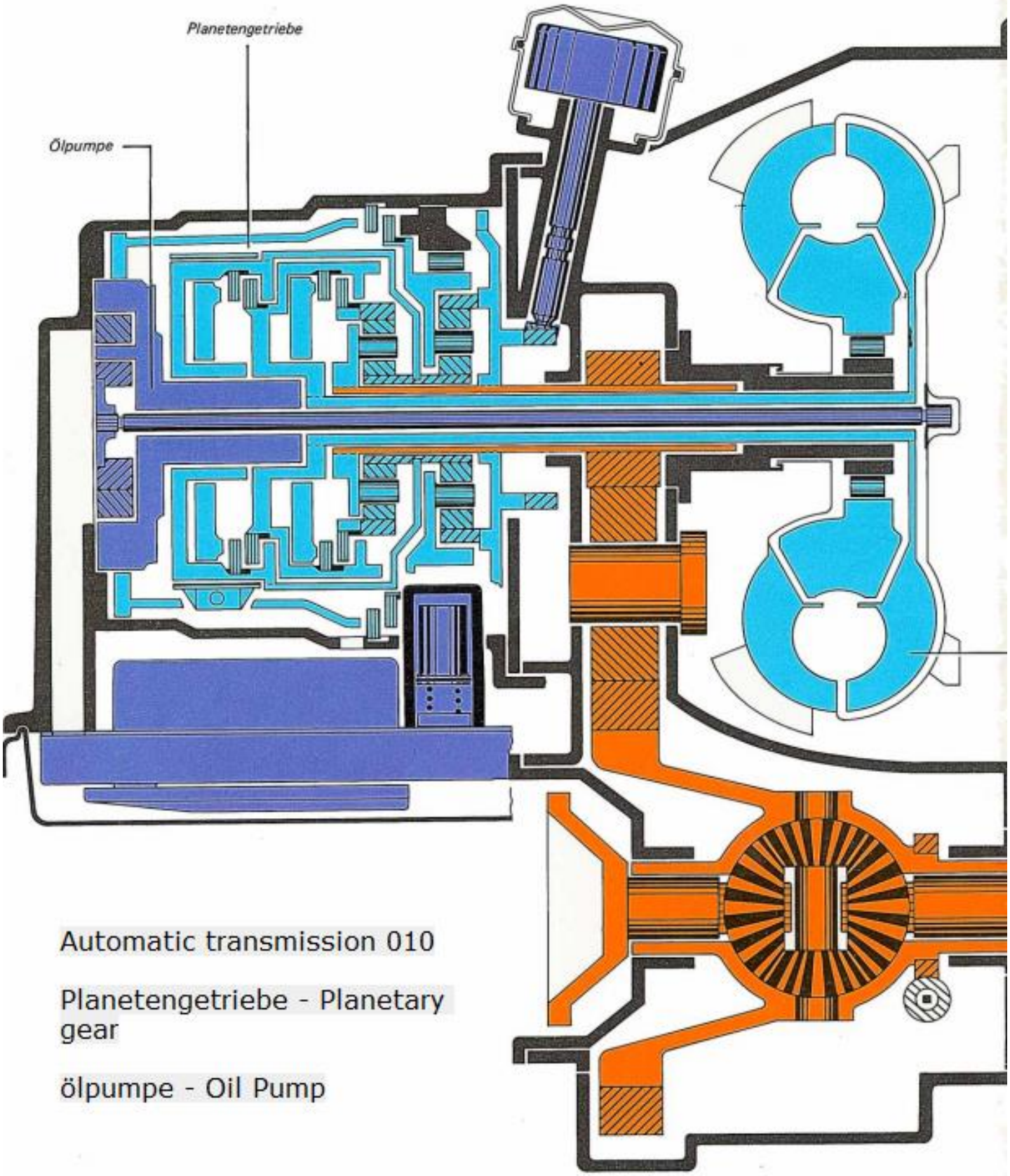

Automatic transmission 010

Planetengetriebe - Planetary gear

ölpumpe - Oil Pump

Konstruktionsmerkmale

Das automatische Getriebe besteht im wesentlichen aus

- dem **Drehmomentwandler**
- dem **Planetengetriebe**
- dem **Achsantrieb**
- und der **Getriebesteuerung**

Die einzelnen Getriebebauteile
sitzen in einem zweiteiligen Aluminium-Druckguß-Gehäuse.
Der linke Teil des Gehäuses
nimmt das Planetengetriebe und den hydraulischen Steuerungsteil auf.
Es ist von unten durch eine Ölwanne aus Stahlblech verschlossen.
Im rechten Teil sind der Drehmomentwandler und der Achsantrieb eingebaut.
Es wird von einem Aluminium-Deckel versteift und abgedichtet.

Die **Ölpumpe** versorgt das Planetengetriebe, den Steuerungsteil
und den Drehmomentwandler mit Arbeits-, Schmier- und Kühlflüssigkeit
(ATF = Automatic Transmission Fluid).

Die Schmierung des Achsantriebes erfolgt durch Hypoid-Getriebeöl.

Design Features

Drehmomentwandler

The automatic transmission consists essentially of.
1 The torque converter
2 The planetary gear
3 The final drive
4 The transmission control

Achsantrieb

The individual transmission components are seated in a two-part aluminum die-cast housing.
The left part of the housing accommodates the planetary gear and the valvebody. It is closed from below by a sheet metal oil pan.
In the right part, the torque converter and the final drive are installed. It is stiffened and sealed by an aluminum lid.

The oil pump supplies the planetary gearbox, the valvebody, and the torque converter with working, lubricating, and cooling fluid [ATF Automatic Transmission Fluid].
The axle drive is lubricated by hypoid gear oil.

Drehmomentwandler - Torque Converter
Achsantrieb - Final Drive

Drehmomentwandler und Planetengetriebe

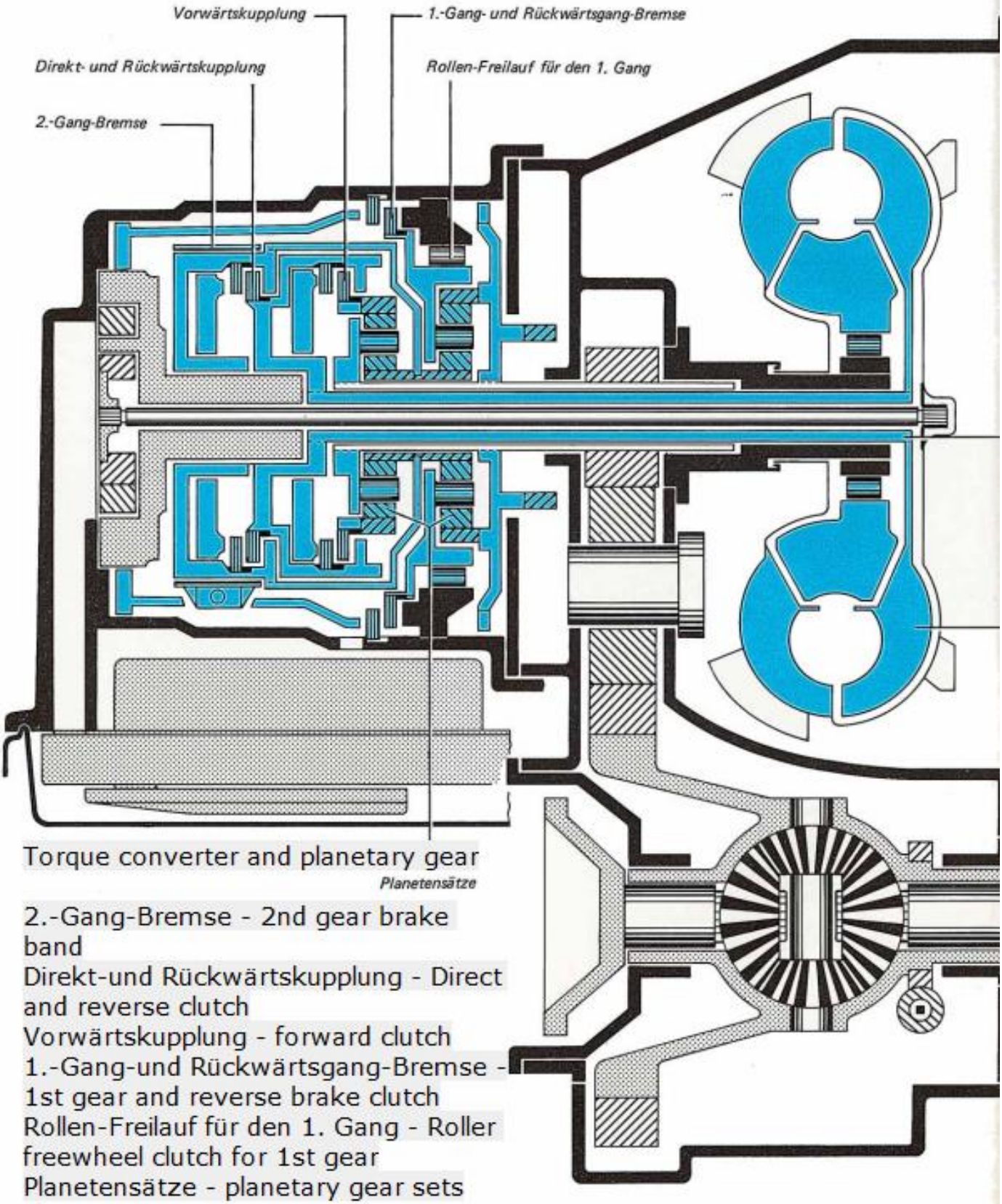

Torque converter and planetary gear

2.-Gang-Bremse - 2nd gear brake band
Direkt-und Rückwärtskupplung - Direct and reverse clutch
Vorwärtskupplung - forward clutch
1.-Gang-und Rückwärtsgang-Bremse - 1st gear and reverse brake clutch
Rollen-Freilauf für den 1. Gang - Roller freewheel clutch for 1st gear
Planetensätze - planetary gear sets

Der Drehmomentwandler
treibt über die Turbinenwelle
das Planetengetriebe an.

Das Planetengetriebe besteht aus

- der **Vorwärtskupplung**
- der **Direkt- und Rückwärtskupplung**
- der **1.-Gang- und Rückwärtsgang-Bremse**
- der **2.-Gang-Bremse**
- den **Planetensätzen**
- dem **Rollen-Freilauf für den 1. Gang**
- und der **Parksperre**

Turbinenwelle

Drehmomentwandler

The torque converter drives the planetary gear via the turbine shaft.

The planetary gear consists of:
-The Forward clutch
-The Direct and reverse clutch
-The Gear and reverse brake
-The 2-speed brake
-The Planetary gear sets
-The Roller-freewheel for 1st gear
-The Parking lock

Turbinenwelle - Turbine Shaft
Drehmomentwandler - Torque Converter

The housing of the torque converter is mounted on the freewheel support and centered in the crankshaft.
The blades of the impeller are brazed to the housing.
The turbine wheel is connected to the planetary gear via the turbine shaft.
The stator is mounted on the freewheel unit.
The freewheel unit is attached to the freewheel support.

The torque converter is driven by the engine via the drive flex plate. It's constantly supplied with ATF by the oil pump. To prevent idling at standstill and when the engine is off, the ball valve seals the oil return.

Freilaufstütze - Freewheel Support
Leckölrücklauf - Leaking Oil Return
ölzulauf - Oil Supply
ölrücklauf - Oil Return
Kugelventil - Torque Converter Ball Check Valve

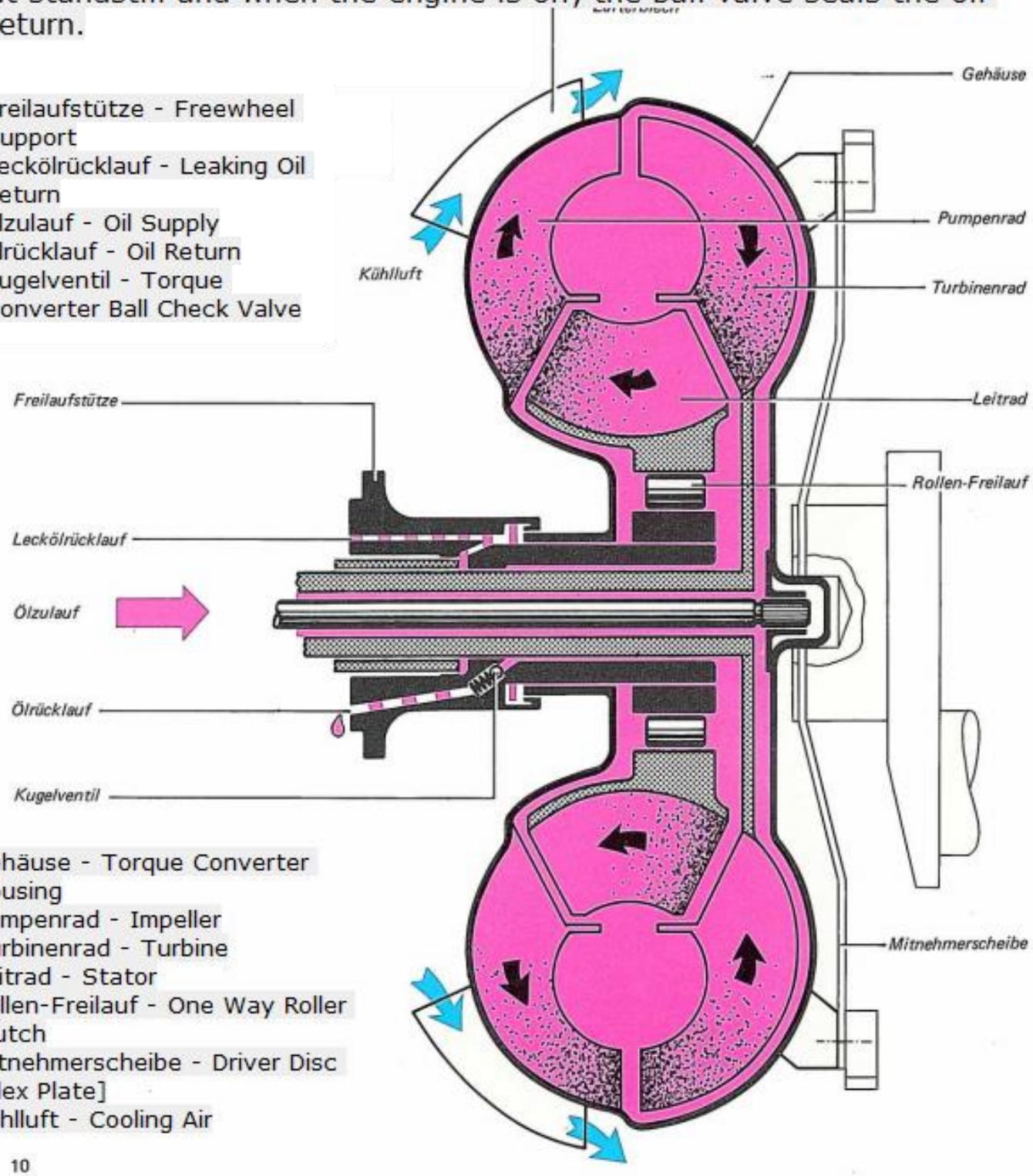

Gehäuse - Torque Converter Housing
Pumpenrad - Impeller
Turbinenrad - Turbine
Leitrad - Stator
Rollen-Freilauf - One Way Roller Clutch
Mitnehmerscheibe - Driver Disc [Flex Plate]
Kühlluft - Cooling Air

Function

With the engine running, the oil that is between the vanes of the pump impeller is pressed further outward against the blade of the turbine wheel by the action of the centrifugal force. Due to the flowing oil flow, the turbine wheel is driven in the direction of engine rotation.

After leaving the turbine wheel, the oil flows against the blade in the stator. Since the stator wheel is locked against the direction of engine rotation, results on the blades of the turbine wheel, a reaction force that causes the torque conversion.

Conversion range
The torque conversion at the moment of starting, at maximum speed difference between the pump and turbine wheel, the largest - about 2.5 times [ed. Stall speed? The Stall speed on a VW 'K' Torque converter is 2,200-2,400 rpm]. With increasing vehicle speed and correspondingly smaller speed difference, the torque conversion decreases steadily.

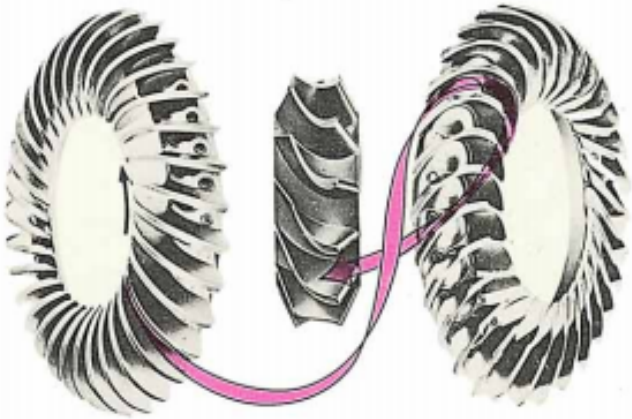

Coupling region
At a speed ratio of about 0.85 [ed. torque converter slip ratio?], the torque converter lockup begins. The turbine torque is equal to the engine torque; There is no torque conversion anymore. As the driving speed continues to increase, the torque converter only works as a hydraulic clutch.

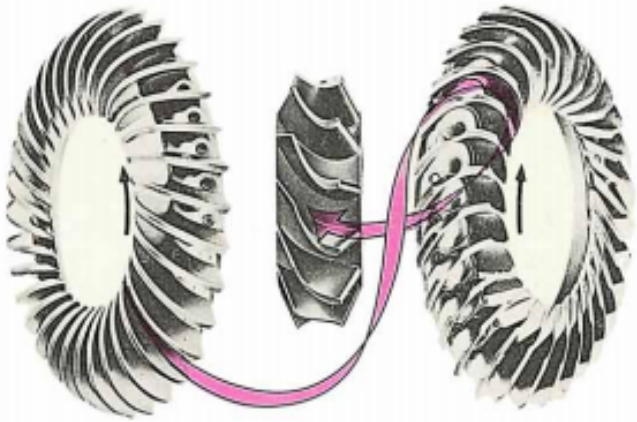

Braking range
If the turbine wheel reaches a higher speed than the impeller [ie when shifting gears] the torque converter works in the reverse direction as a hydraulic clutch. The turbine wheel now drives the impeller and thus the engine. This is the so-called brake area.

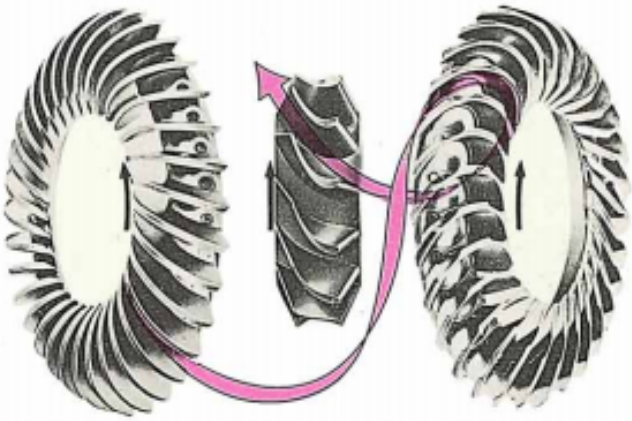

netensätze

Ringrad - Ring Gear
Planetenträger -Planet Carrier
Planetenräder - Planetary Gears
Sonnenrad - Sun Gear
Mitnehmerglocke - Planetary Gear set housing
Rollen-Freilauf für den1.Gang - One way Roller Freewheel for 1st gear
Vorwärtsplanetensatz - Front Planetary gearset
Rückwärtsplanetensatz - Rear Planetary gearset

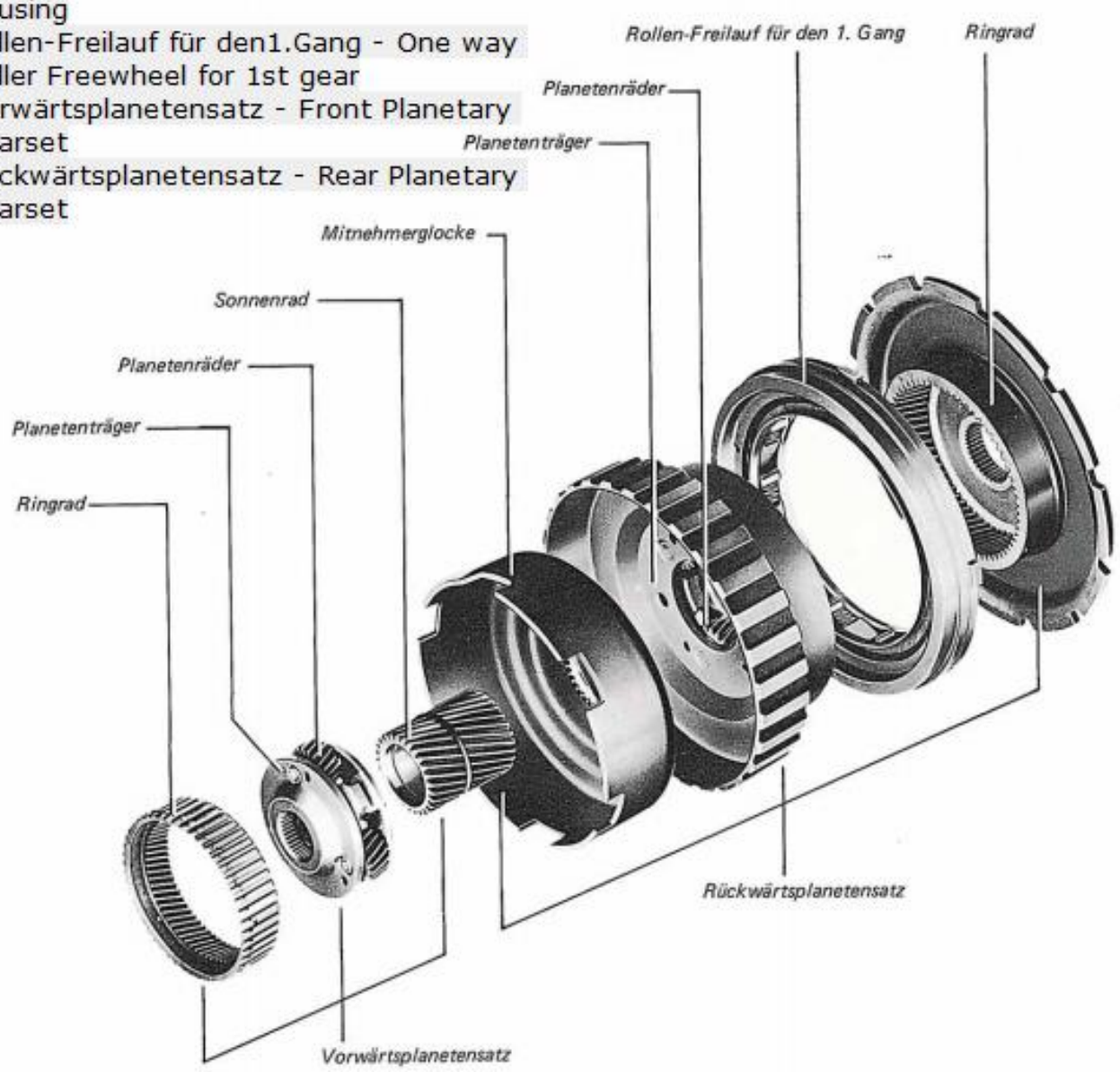

The Planetary Gear sets

The planetary drive consists of the forward planetary set and the reverse planetary set. Both planetary gear sets have a common sun gear. There are 3 planet gears [ed. some have 4 planet gears] with the respective ring gears in engagement. The sun gear is connected via the driver shell with the direct and reverse clutch. The inner ring of the roller-freewheel for the 1-speed is pimped on the planet carrier of the reverse planetary gear set. The outer ring is supported by its noses [ed. clutch pack?] in the floating housing.

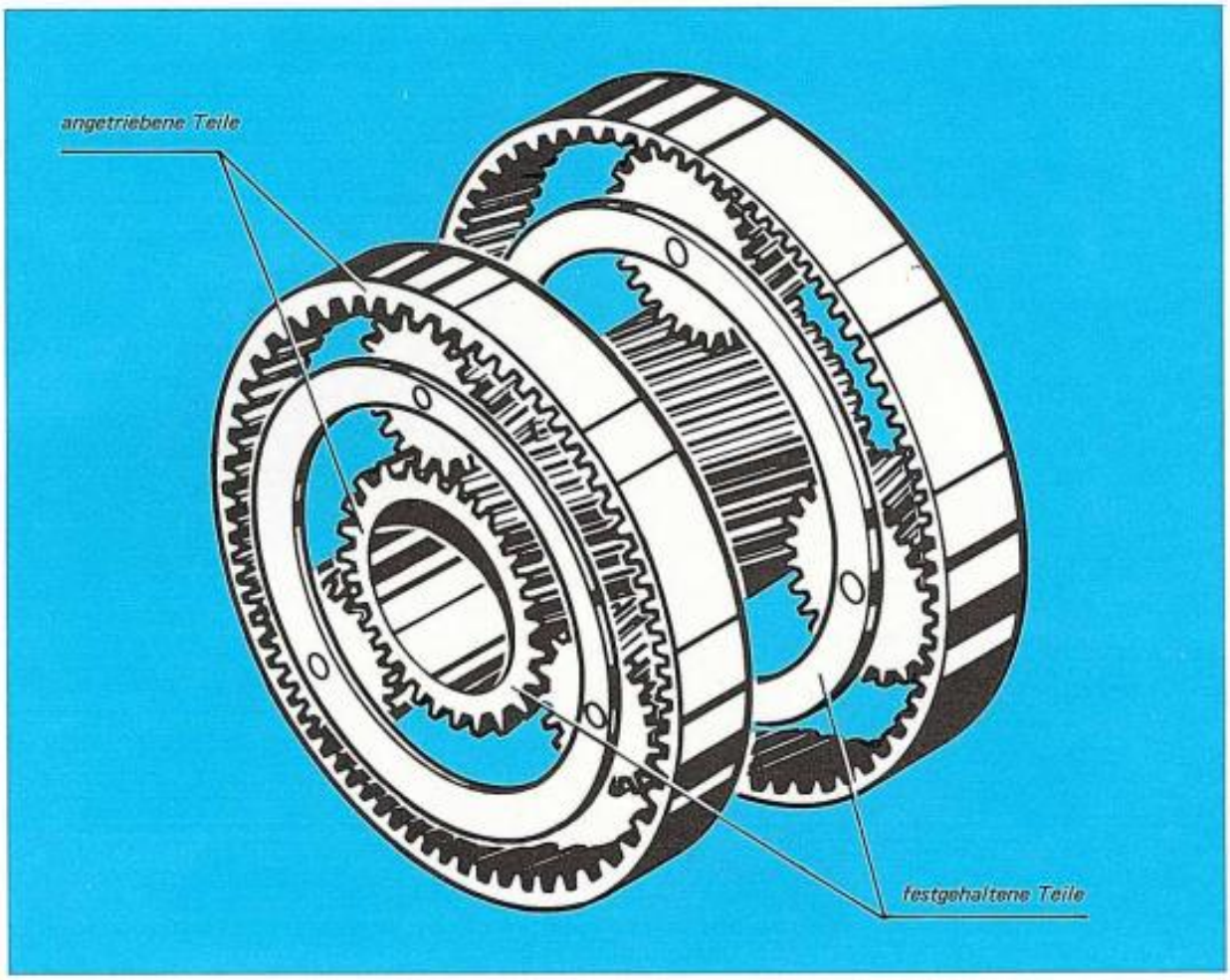

Function

In a planetary gear set, all gears are constantly engaged. The various stages of shifting are achieved, without interruption of traction, by driving or holding the sun gear, the planet gears, or the ring gear.

To take on the task of holding the gears are the:
-The forward clutch
-The direct and reverse brake
-The 2-speed brake
-The roller freewheel for the 1st gear

Angetriebene Teile - Driven Parts
Festgehaltene Teile - Held Parts

Die Vorwärtskupplung

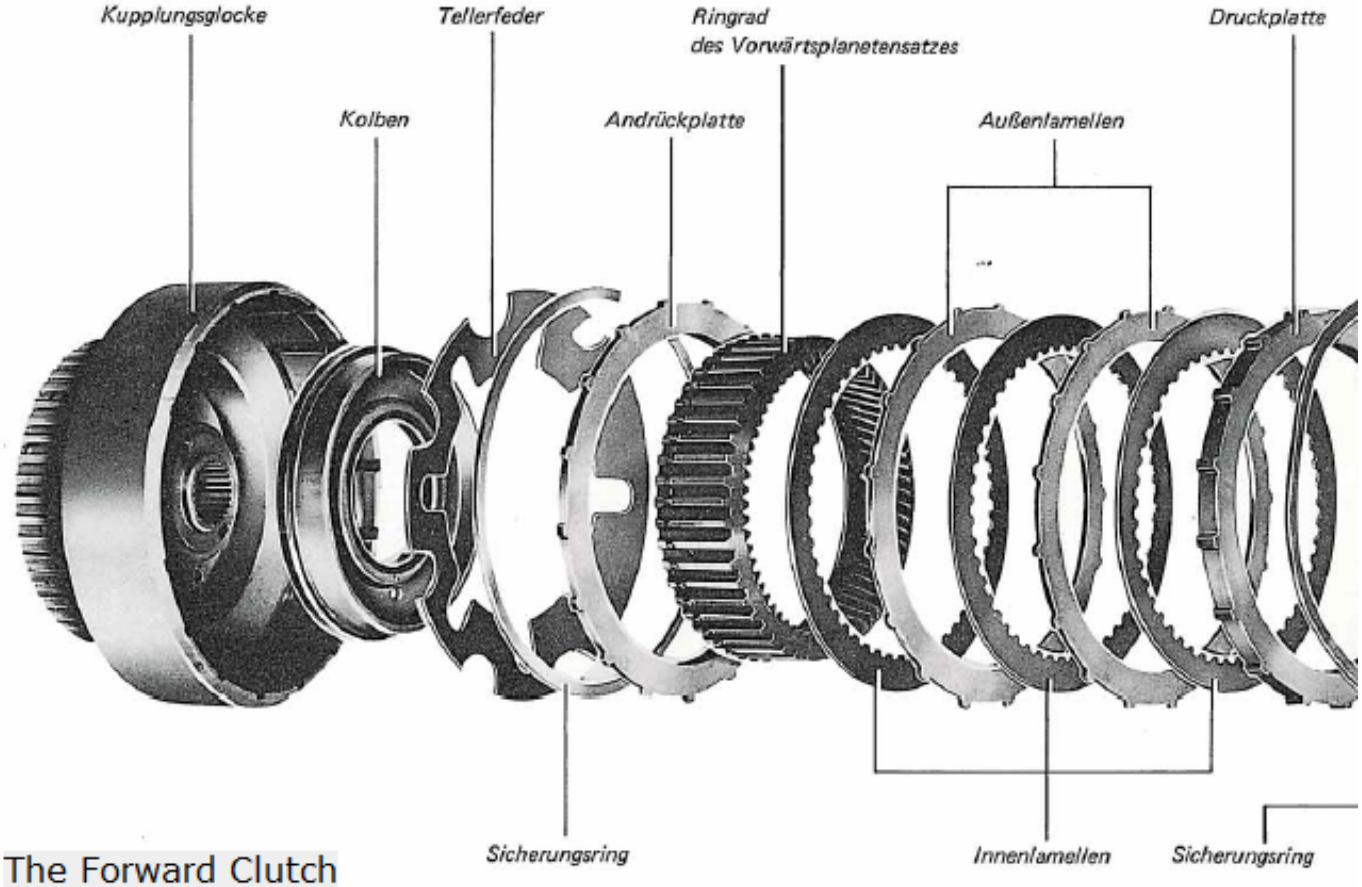

The Forward Clutch

The forward clutch is engaged in all forward gears. The disk pack is installed in the shell of the forward clutch. It consists of inner and outer plates.
They are engaged by the piston via the diaphragm spring and the pressure plate. The inner disks engage with the teeth in the ring gear of the forward planetary gear set.

Kupplungsglocke - Clutch housing
Kolben - Piston
Tellerfeder - Belleville spring
Andrückplatte - Pressure Plate
Ringrad des Vorwärtsplanetensatzes - Ring wheel of the forward planetary set
Außenlamellen - Outer Steel Plates
Druckplatte - End plate
Sicherungsring - Circlip
Innenlamellen - Inner Clutch Disks

The axial clearance of the slats must be adjusted.

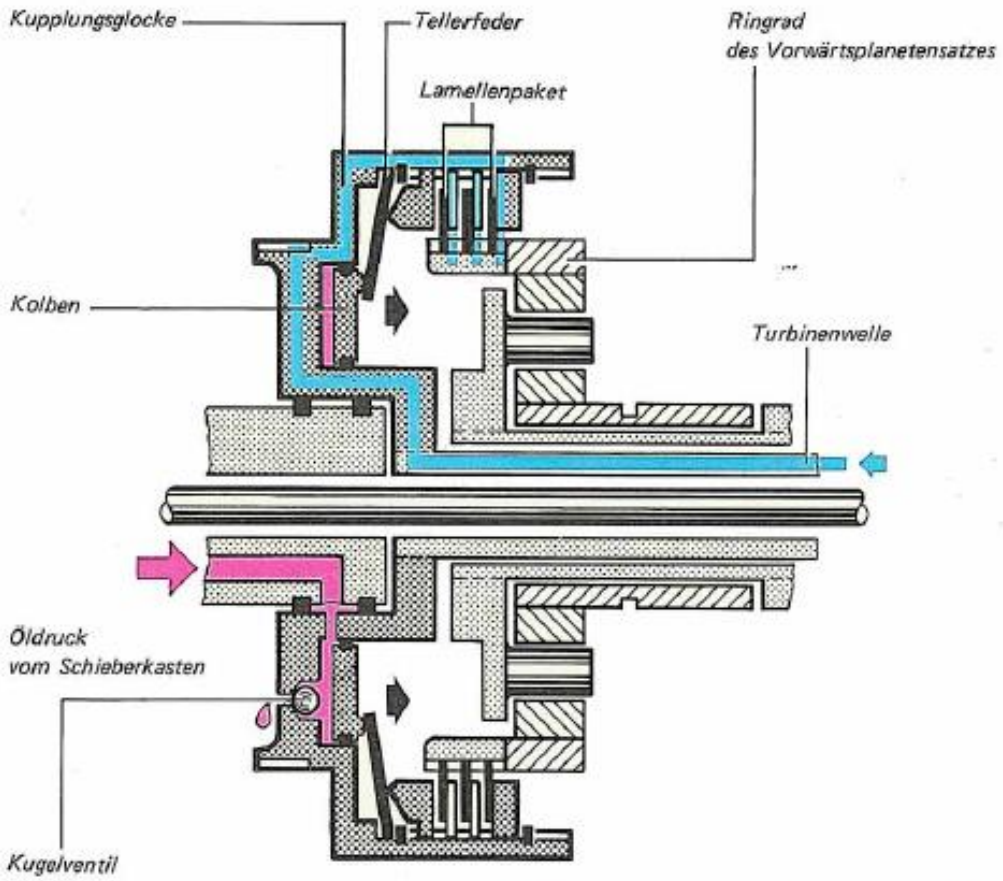

Function

The torque of the turbine shaft is transmitted from the forward clutch via the clutch shell and the disc pack to the ring gear of the forward implant set.
With oil pressure, the piston actuates the disc spring, which acts as a lever. It transmits its power 2.2 times more intensively to the clutch pack. As a result, the inner disks are locked with the outer disks.
To release, the piston is relieved of oil pressure and is pushed back by the diaphragm spring. To allow complete release, the residual oil pressure remaining, is dissipated via a ball valve.

Kupplungsglocke - Clutch Housing
Tellerfeder - Belleville Spring
Lamellenpaket - Clutch Disk Pack
Ringrad des Vorwärtsplanetensatzes - Ring Gear of the Front Planetary Gear set
Kolben - Piston
Turbinenwelle - Turbine Shaft
öldruck vom Schieberkasten - Oil Pressure from Valve Body
Kugelventil - Ball Check Valve

Die Direkt- und Rückwärtskupplung

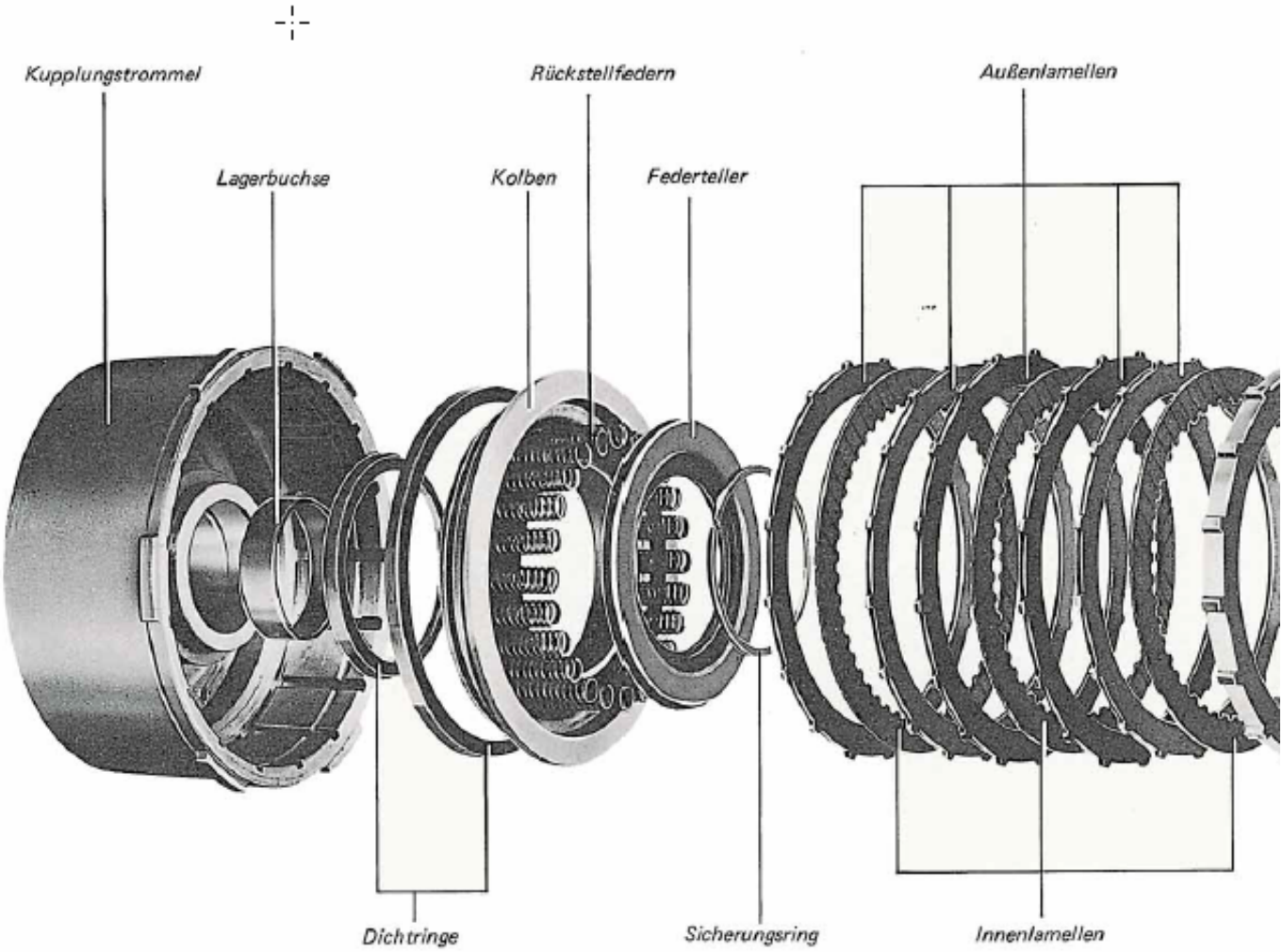

The Direct and Reverse Clutch

The direct and reverse clutch is closed in 3rd gear and reverse gear. The disk pack is installed in the clutch drum. It consists of inner and outer plates. They are directly engaged by the piston. The inner disks engage with the teeth on the clutch forward clutch shell.

Kupplungstrommel - Clutch Drum
Lagerbuchse - Bushing
Kolben - Piston
Rückstellfedern - Return Springs
Federteller - Spring Plate
Außenlamellen - Outer Steel Plates
Dichtringe - Seals
Sicherungsring - Circlip
Innenlamellen - Inner Clutch disks

The axial clearance of the slats must be adjusted.

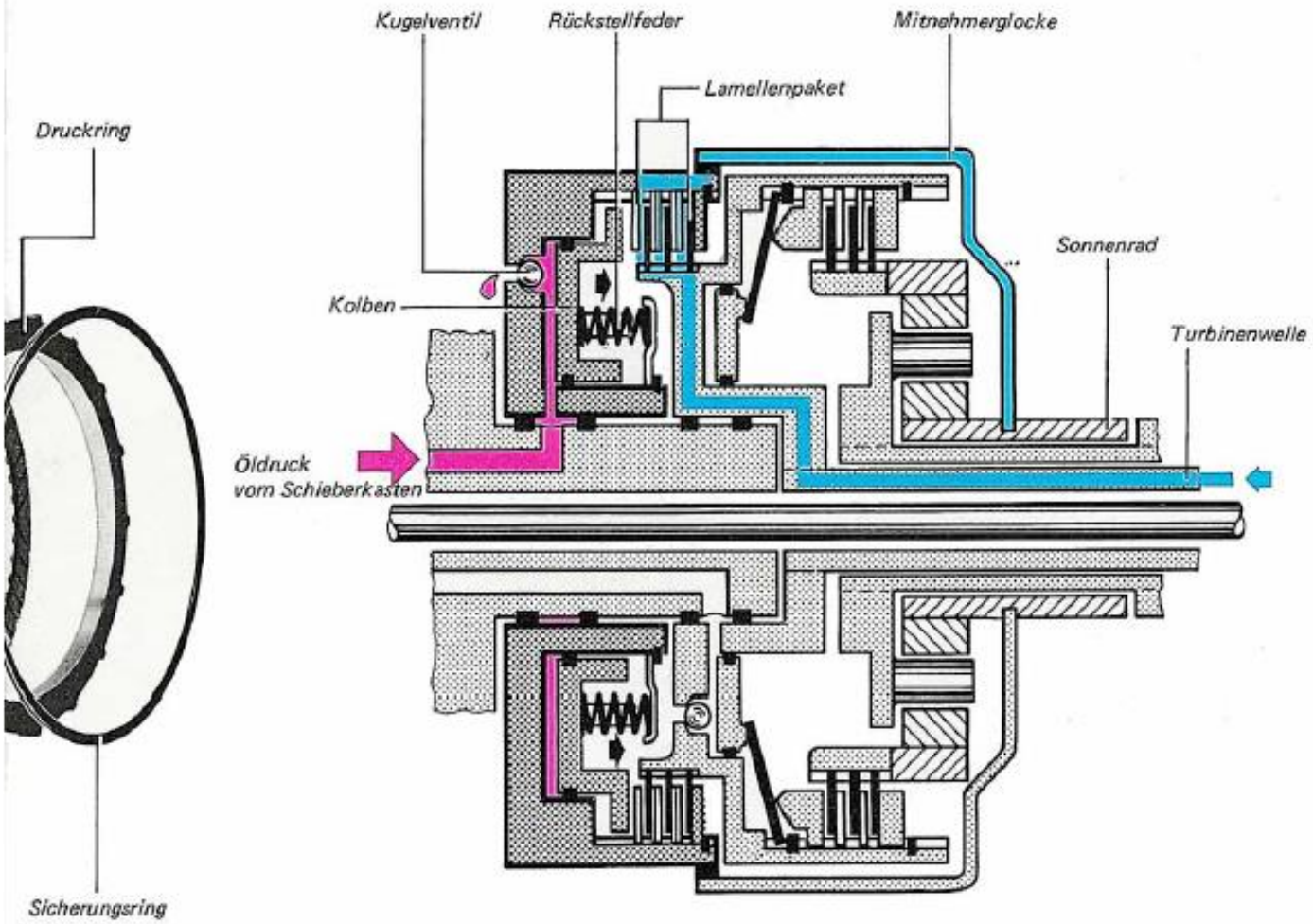

Function

The turbine shaft torque is applied via the forward clutch shell, the direct and reverse clutch disk pack, and the bell jack transmit the sun gear.
The oil pressure forces the piston to compress the disk pack. As a result, the inner disks are locked together by the outer disks.
To release the piston is relieved of oil pressure and pushed back over 24 springs. To allow complete release, the residual residual oil pressure can dissipate via a ball valve.
To release the piston, the oil pressure is relieved and 24 springs push back the piston back. To allow complete release, there is a ball valve to relieve the oil pressure.

Kugelventil - Ball Check Valve
Rückstellfeder - Return Springs
Lammellenpaket - Clutch Pack
Mitnehmerglocke - Planetary Gear set housing
Sonnenrad - Sun Gear
Turbinenwelle - Turbine Shaft
Kolben - Piston
öldruck vom Schieberkasten - Oil Pressure from Valve Body
Druckring - Pressure Ring
Sicherungsring - Circlip

Die 1. Gang- und Rückwärtsgang-Bremse

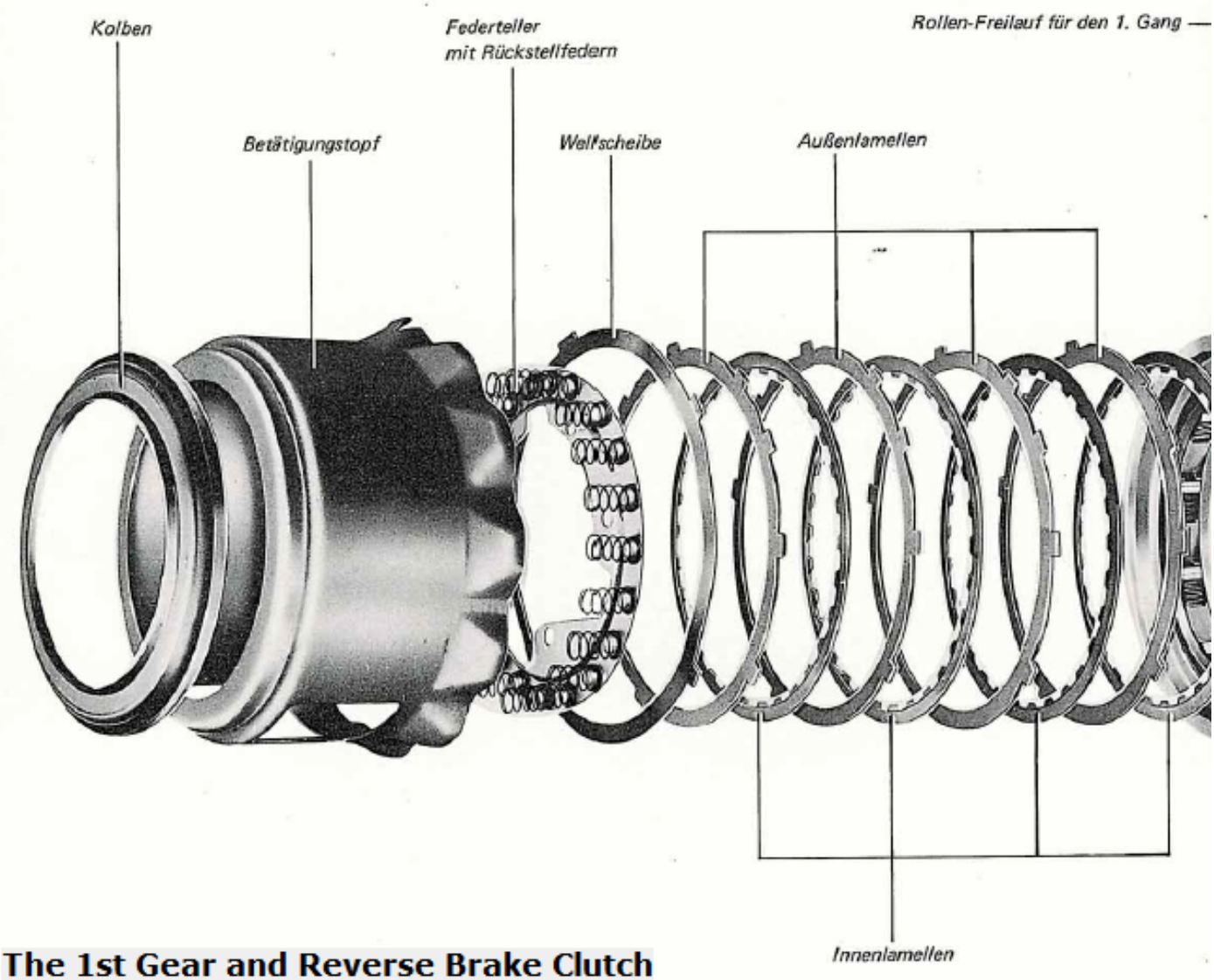

The 1st Gear and Reverse Brake Clutch

The 1 gear and reverse brake is a multi-disc brake. It acts on the planet carrier of the reverse planetary set. The outer plates are guided in grooves in the gearbox housing. The inner disks are pushed onto the planet carrier of the reverse planetary gear set.

Kolben - Piston
Betätigungstopf - Clutch Piston
Federteller mit Rückstellfedern - Spring Plate with Return Springs
Wellischeibe - Wave Washer
Außenlamellen - Outer Steel Plates
Rollen-Freilauf für den 1.Gang - Roller Freewheel for 1st Gear
Innenlamellen - Inner Clutch Disks

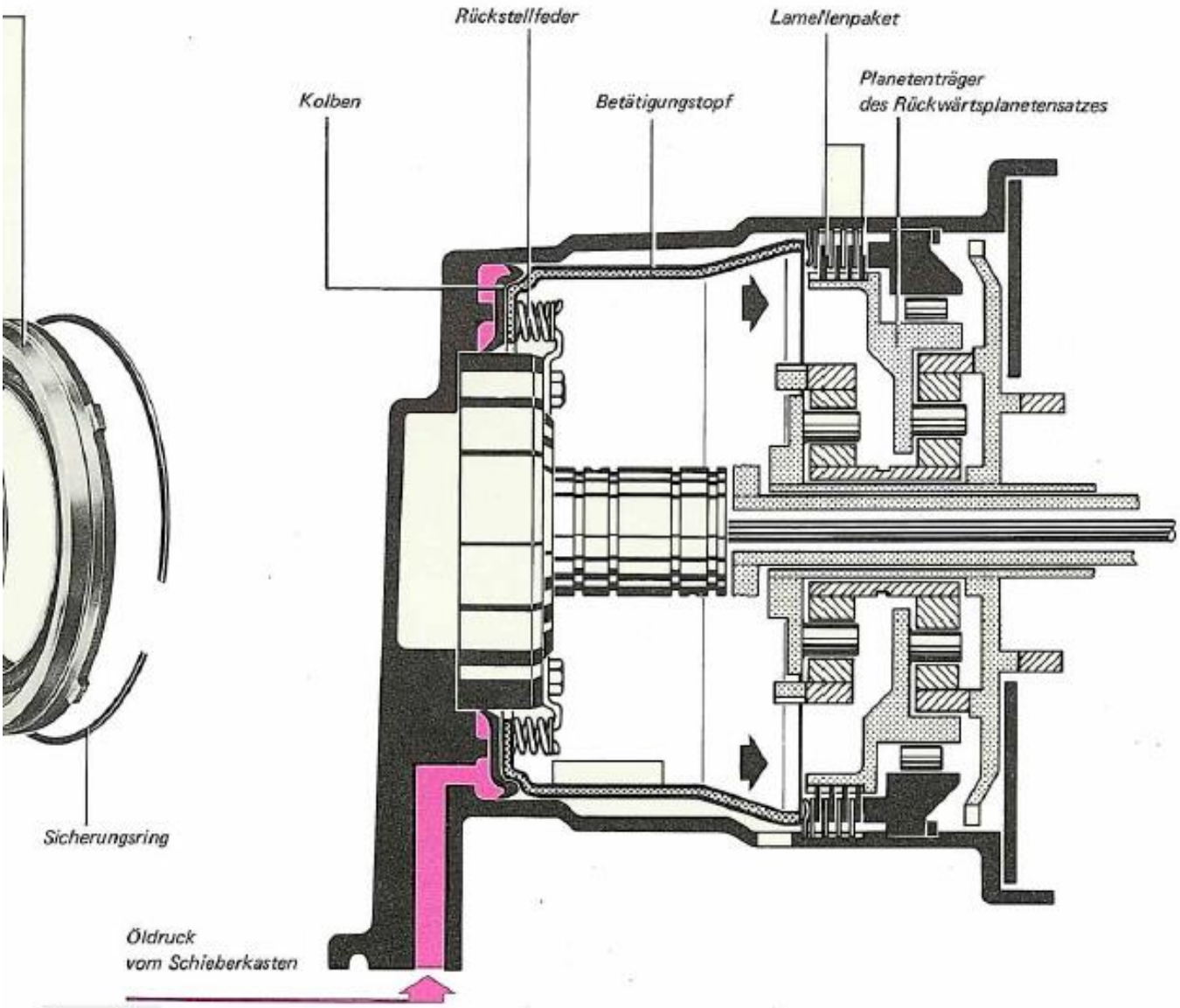

Function

In 1st gear, in selector lever position 1, and in reverse, the piston is subjected to oil pressure. It transmits its power on the actuator pot on the disk pack. As a result, the planet carrier of the reverse planetary gear set is held.
Releasing the piston is done by relieving the oil pressure and also pushed back with over 20 springs.

Kolben - Piston
Rückstellfeder - Return Springs
Betätigungstopf - Clutch Piston
Lamellenpaket - Clutch Pack
Planetenträger des Rückwärtsplanetensatzes - Planet Carrier Housing for Rear Planetary gear set
öldruck vom Schieberkasten - Oil Pressure from Valve Body
Sicherungsring - Circlip

Die 2. Gang-Bremse

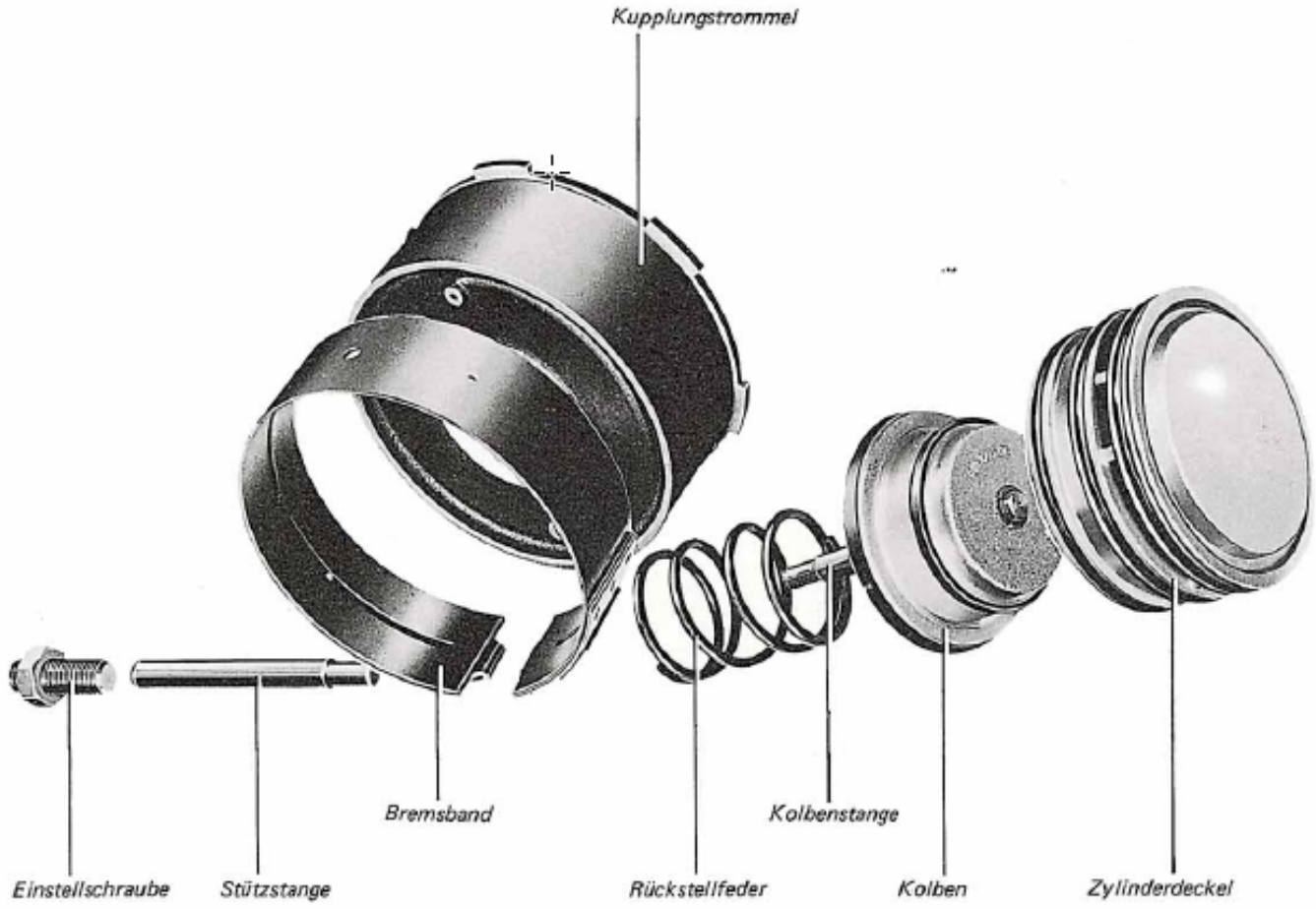

The 2nd Gear Brake Band

The 2 gear brake band is a simply looped band brake with a glued friction lining.
It acts on the coupling drum of the direct and reverse clutch. Actuation takes place via a raised piston, which is mounted in a cylinder cover. The cylinder cover is mounted and installed laterally in the gearbox housing.

Kupplungstrommel - Clutch Drum
Einstellschraube - Adjuster Bolt
Stützstange - Adjuster Rod
Bremsband - Brake Band
Rückstellfeder - Return Spring
Kolbenstange - Piston Rod
Kolben - Piston
zylinderdeckel - Cylinder Cover

The play of the brake band is adjusted with the adjustment screw.

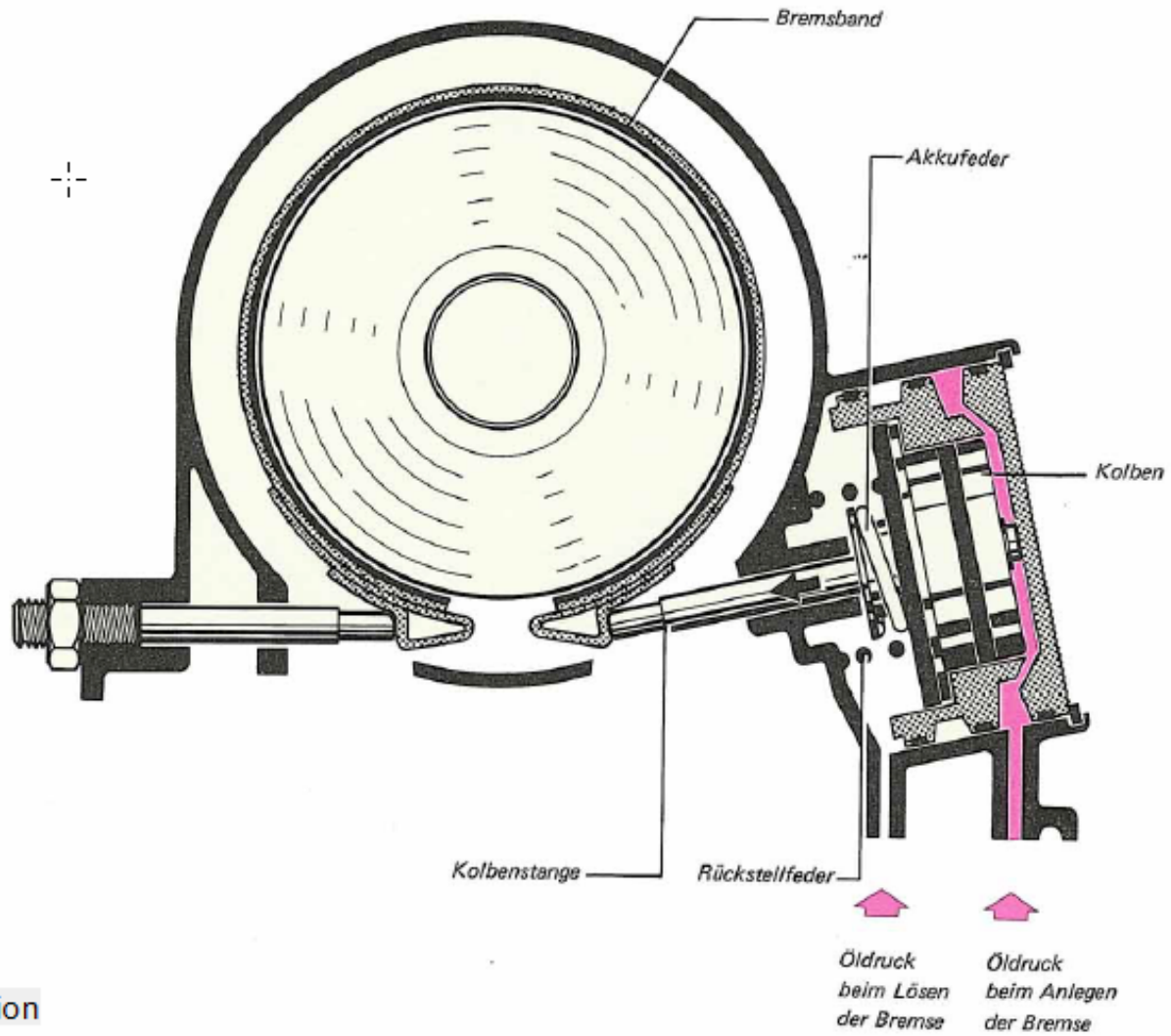

Function

In 2nd gear, the small piston surface is pressurized with oil pressure. The piston transmits its power via a piston stem on the brake band. This holds the drum of the direct and reverse clutch. The reaction spring causes soft engagement of the 2nd gear brake band.
To release the brake, when going in 3rd gear, the large piston surface on the inside with oil pressure plus spring force of the return spring, the piston is pushed back. The brake band is released.

Bremsband - Brake Band
Akkufeder - Cushion Spring
Kolben - Piston
Kolbenstange - Piston Rod
Rückstellfeder - Return Spring
öldruck beim Lösen der Bremse - Oil Pressure to Release Brake Band
öldruck beim Anlegen der Bremse - Oil Pressure to Apply Brake Band

Der Kraftfluß

1. Gang

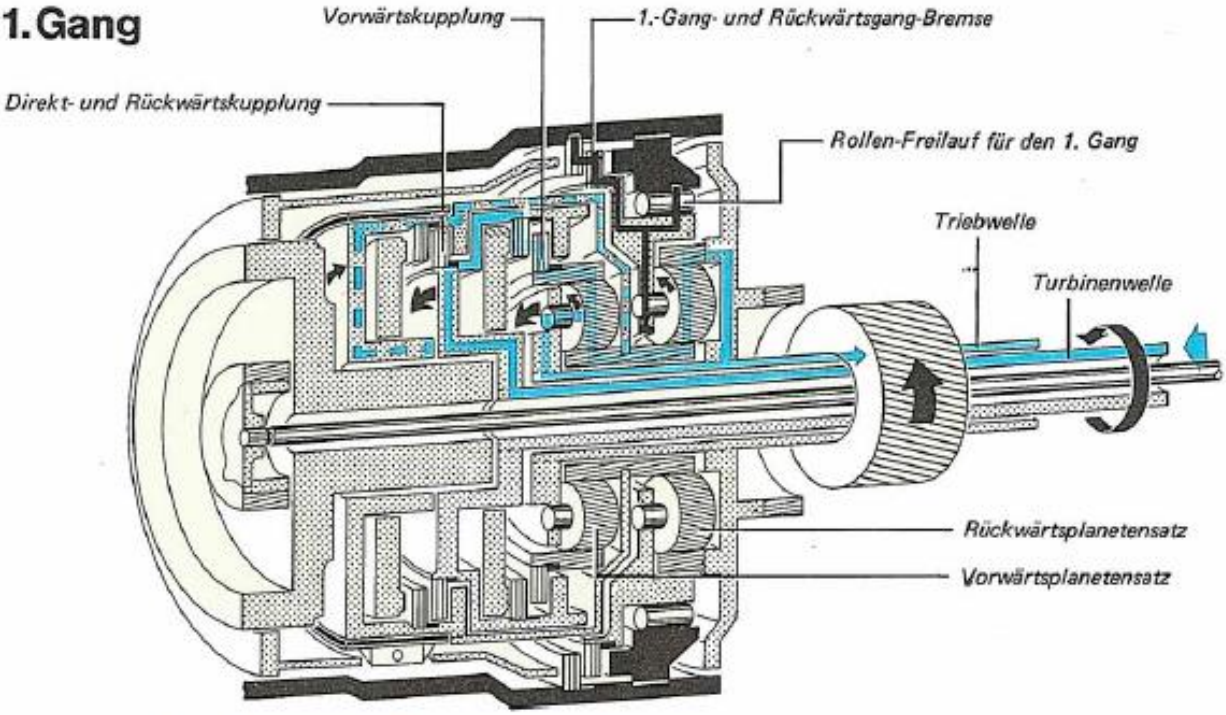

Power Flow for 1st Gear

In 1st gear, the forward planetary set and reverse planetary set are involved in the power flow.
The turbine shaft drives the ring gear of the forward planetary gear set via the engaged forward clutch. The forces occurring at the three planet wheels act on the planet carrier on the drive shaft and on the sun gear on the 3 [or 4] planet carriers of the reverse planetary gear set. The ring gear of the reverse planetary gear set is also connected to the drive shaft. The planet carrier of the reverse planetary set thus acts as a torque support.
In the selector lever positions D and 2, the planet carrier of the reverse planetary gear set is prevented by the roller freewheel from turning back.

Direkt-und Rückwärtskupplug - Direct and Reverse Clutch
Worwärtskupplung - Forward Clutch
1.-Gang- un Rückwärtsgang-Bremse - 1st Gear and Reverse Brake Clutch
Rollen-Freilauf für den 1. Gang - Roller Freewheel for 1st Gear
Triebwelle - Drive Shaft
Turbinenwelle - Turbine Shaft
Rückwärtsplanetensatz - Rear Planetary Gearset
Vorwärtsplanetensatz - Front Planetary Gearset

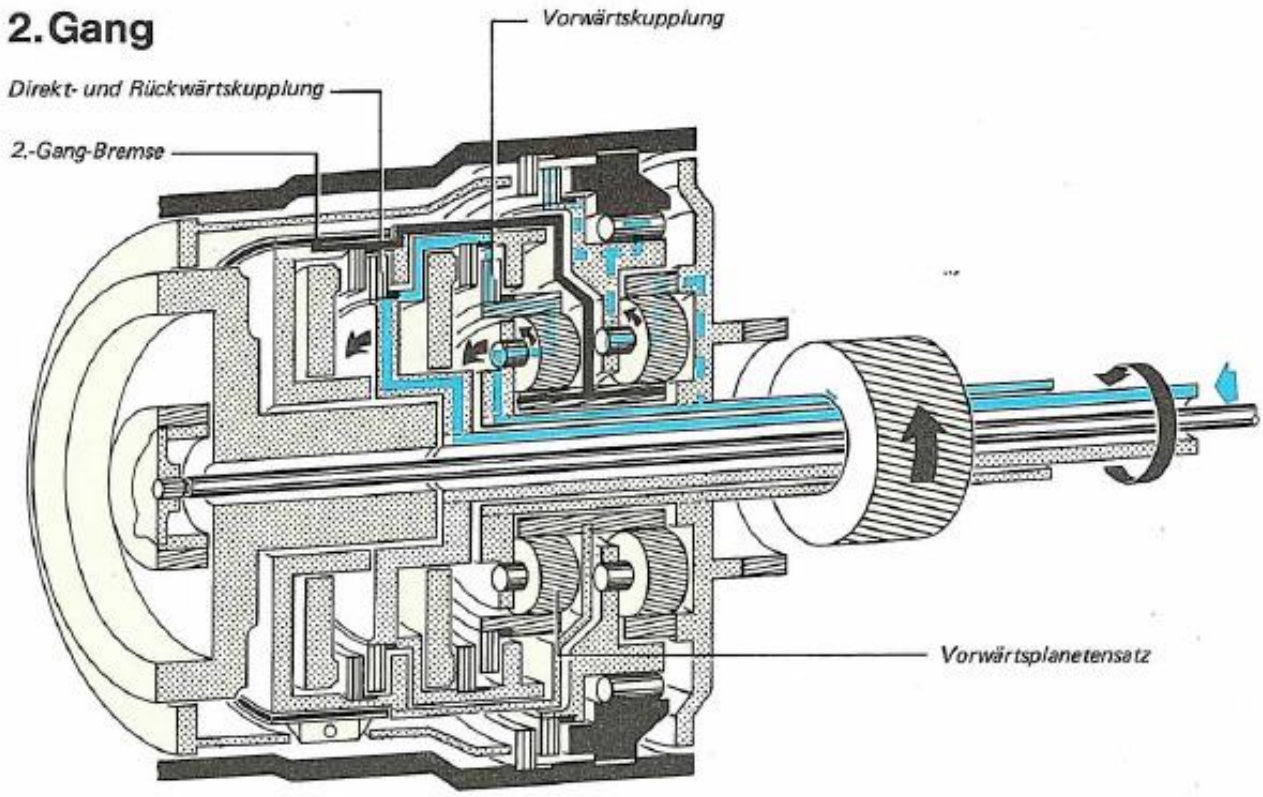

Power Flow for 2nd Gear

In 2nd gear, only the forward planetary gear set is involved in the power flow.
The turbine shaft drives the ring gear of the forward planetary gear set via the engaged forward clutch. The forces occurring at the 3 [or 4] planetary gears act on the drive shaft via the planet carrier. The sun gear is held in place by the clutch shell and the clutch drum of the direct and reverse clutch of the 2nd speed brake. The sun gear thus acts as a torque support. The reverse planetary set and the roller freewheel idle, driven at shaft shaft speed by the ring gear.

2.-Gang-Bremse - 2nd Gear Brake Band
Direkt-und Rückwärtskupplug - Direct and Reverse Clutch
Vorwärtskupplung - Forward Clutch
Vorwärtsplanetensatz - Front Planetary Gearset

Der Kraftfluß

3. Gang

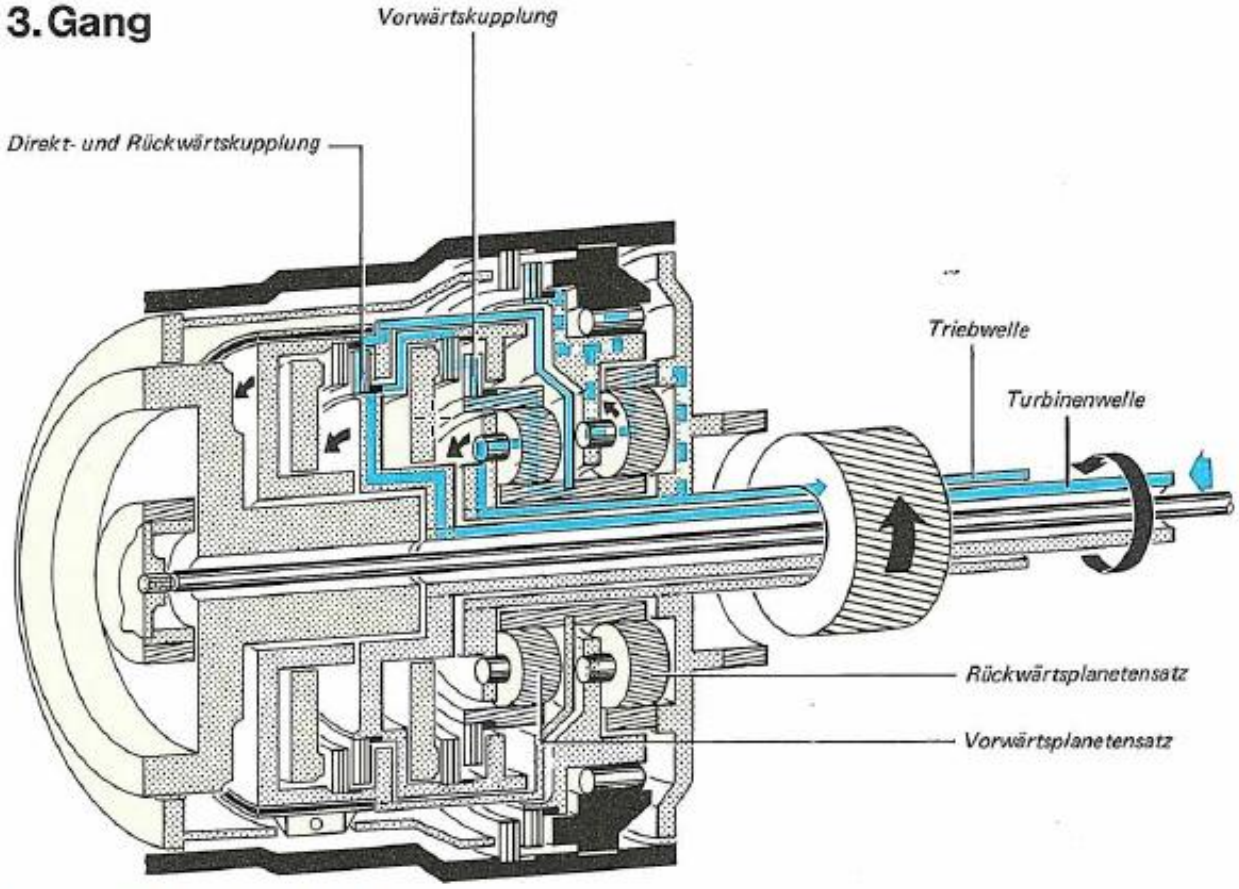

Power Flow for 3rd Gear.

In 3rd gear, only the forward planetary gearset is involved in the power flow.
The turbine shaft drives the ring gear of the front planetary gear set via the engaged forward clutch and the sun gear via the engaged direct and reverse clutch.
The front planetary gear set rotates without rolling motions between the planetary gears. As a result, the drive shaft is driven directly [ed. 1 to 1 ratio] with the speed of the turbine shaft. A torque support is not required.
The rear planetary set turns freely.

Direkt-und Rückwärtskupplug - Direct and Reverse Clutch
Vorwärtskupplung - Forward Clutch
Triebwelle - Drive Shaft
Turbinenwelle - Turbine Shaft
Rückwärtsplanetensatz - Rear Planetary Gearset
Vorwärtsplanetensatz - Front Planetary Gearset

Rückwärtsgang

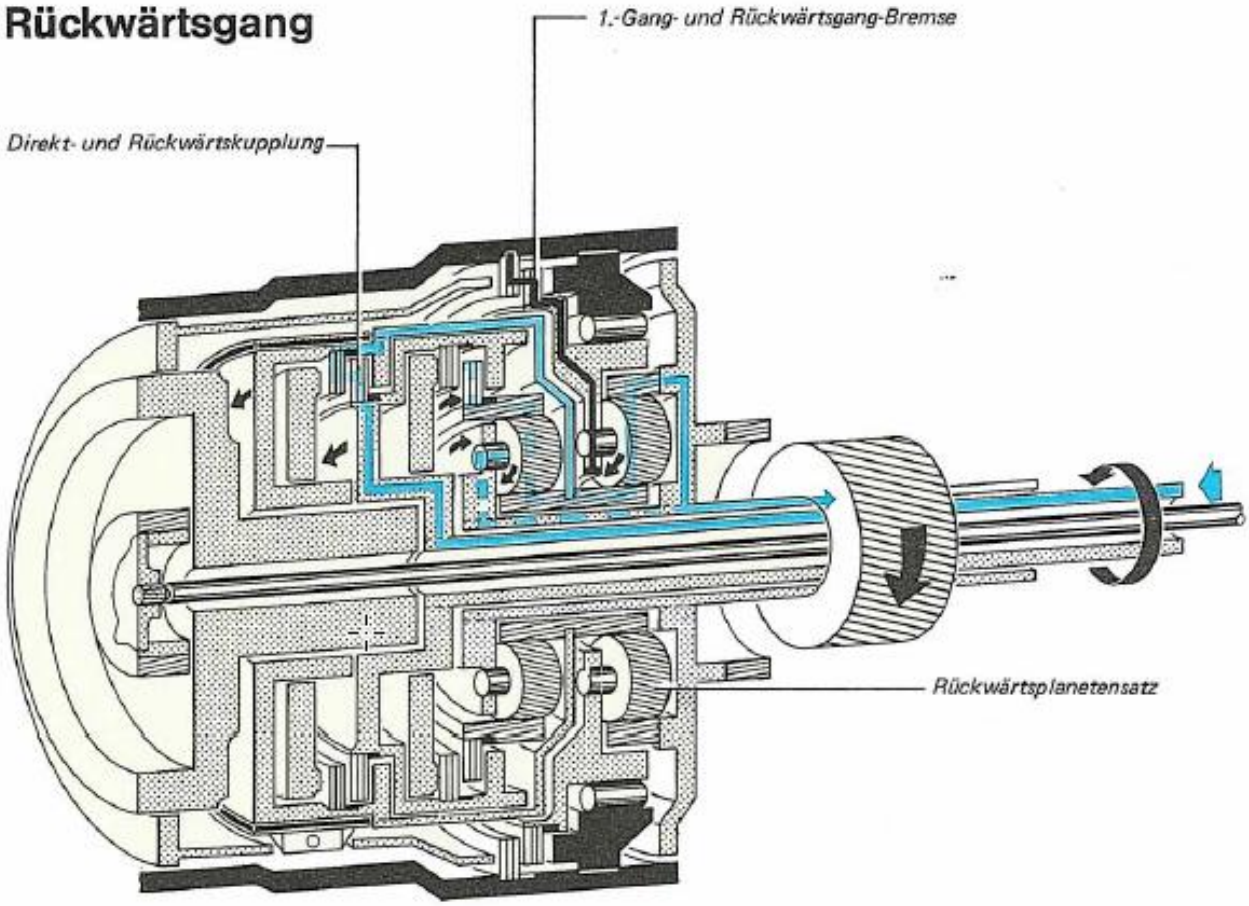

Power Flow for Reverse Gear

In reverse, only the reverse planetary gear set is involved in the power flow. The turbine shaft drives the sun gear via the direct and reverse clutch.
The planet carrier of the reverse planetary gear set is held by the 1st gear and reverse brake. It acts as a torque support.
The ring gear of the reverse planetary gear set and thus also the drive shaft are driven by the planetary gears, but counter to the direction of rotation of the turbine shaft.
The forward planetary set is turned free of forces.

Direkt-und Rückwärtskupplug - Direct and Reverse Clutch
1.-Gang- un Rückwärtsgang-Bremse - 1st Gear and Reverse Brake Clutch
Rückwärtsplanetensatz - Rear Planetary Gearset

Die Parksperre

The Park Lock

In the planetary gear a parking lock is installed, which blocks the drive wheels of the vehicle.
It is required, because in an automatic transmission, the power flow is possible with the engine running and therefore the vehicle can not be blocked by engaging a gear with the engine off.
The parking lock is operated with the selector lever. It may only be inserted when the vehicle is stationary and the engine is switched off.

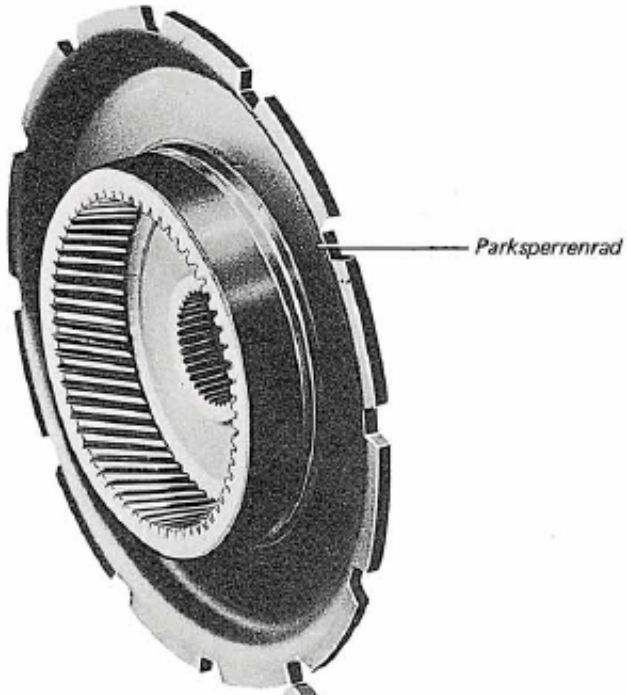

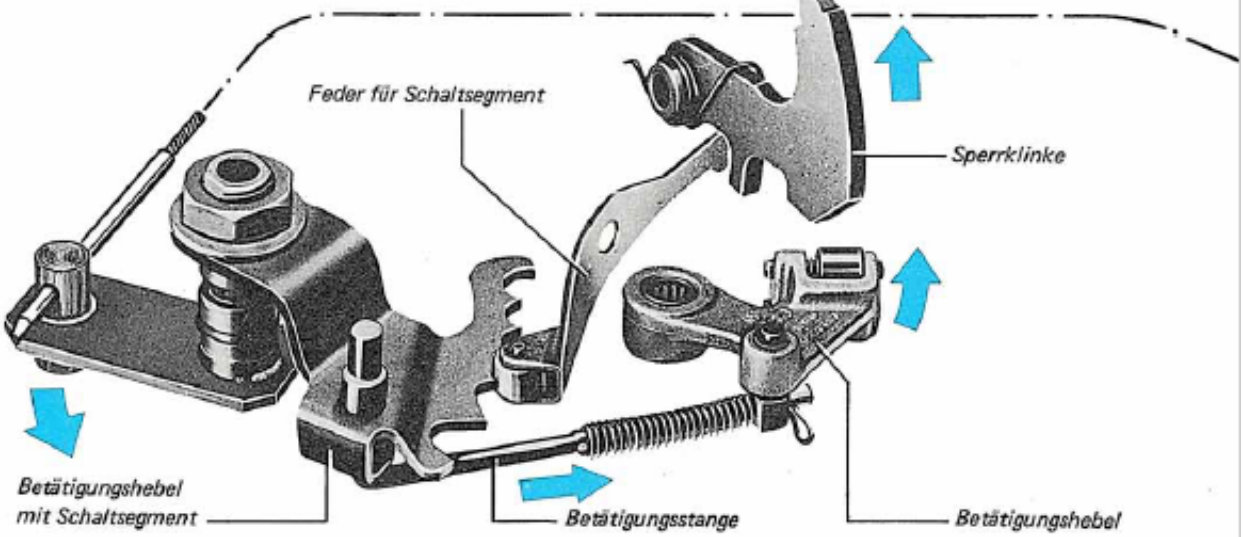

Parksperrenrad - Parking Gear
Betätigungshebel mit Schaltegment - Shift Positioning lever
Betätigungsstange - Actuating Rod
Betätigungshebel - Actuating Lever
Sperrklinke - Park Lock Pawl

Function

When inserting the selector lever in position P, the pawl is pressed against the outer edge of the parking lock gear. It engages into a catch of the parking lock wheel.

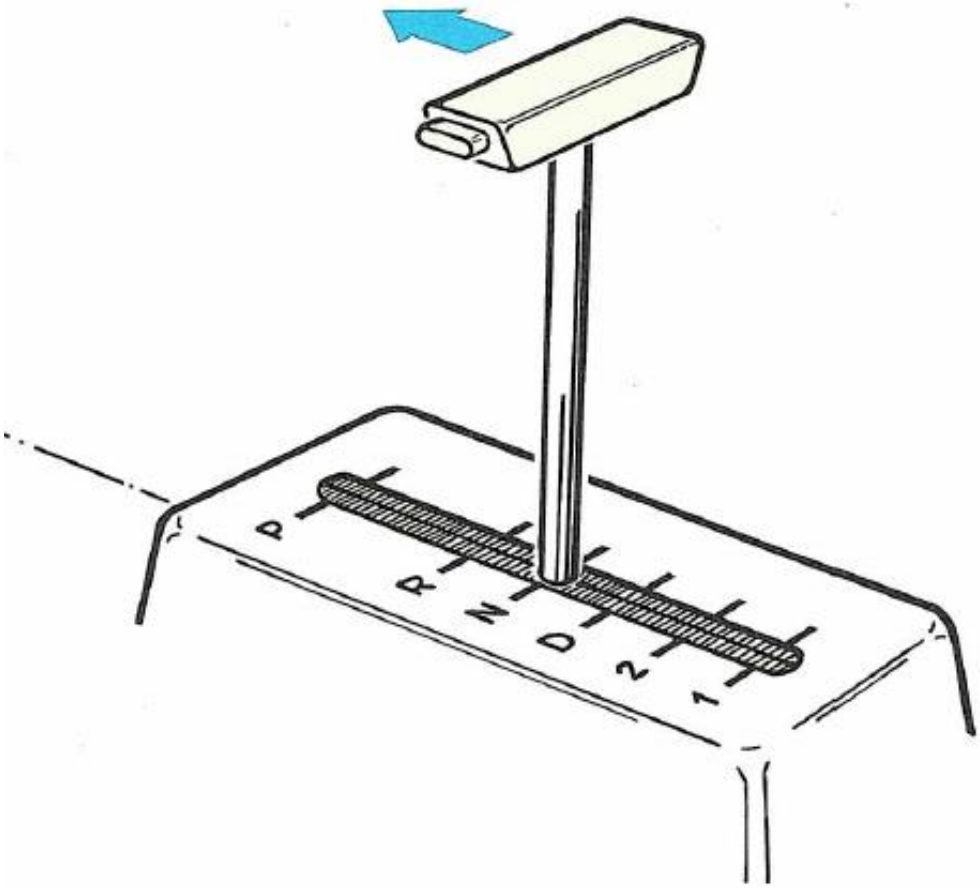

Funktion

Beim Einlegen des Wählhebels in Stellung **P**
wird die **Sperrklinke** federnd
gegen den Außenrand des **Parksperrenrades** gedrückt.
Sie springt in eine Raste des Parksperrenrades ein.

Achsantrieb

Final Drive

Gelenkflansch mit Welle - Axle Flange
Ausgleichgetriebe - Differential

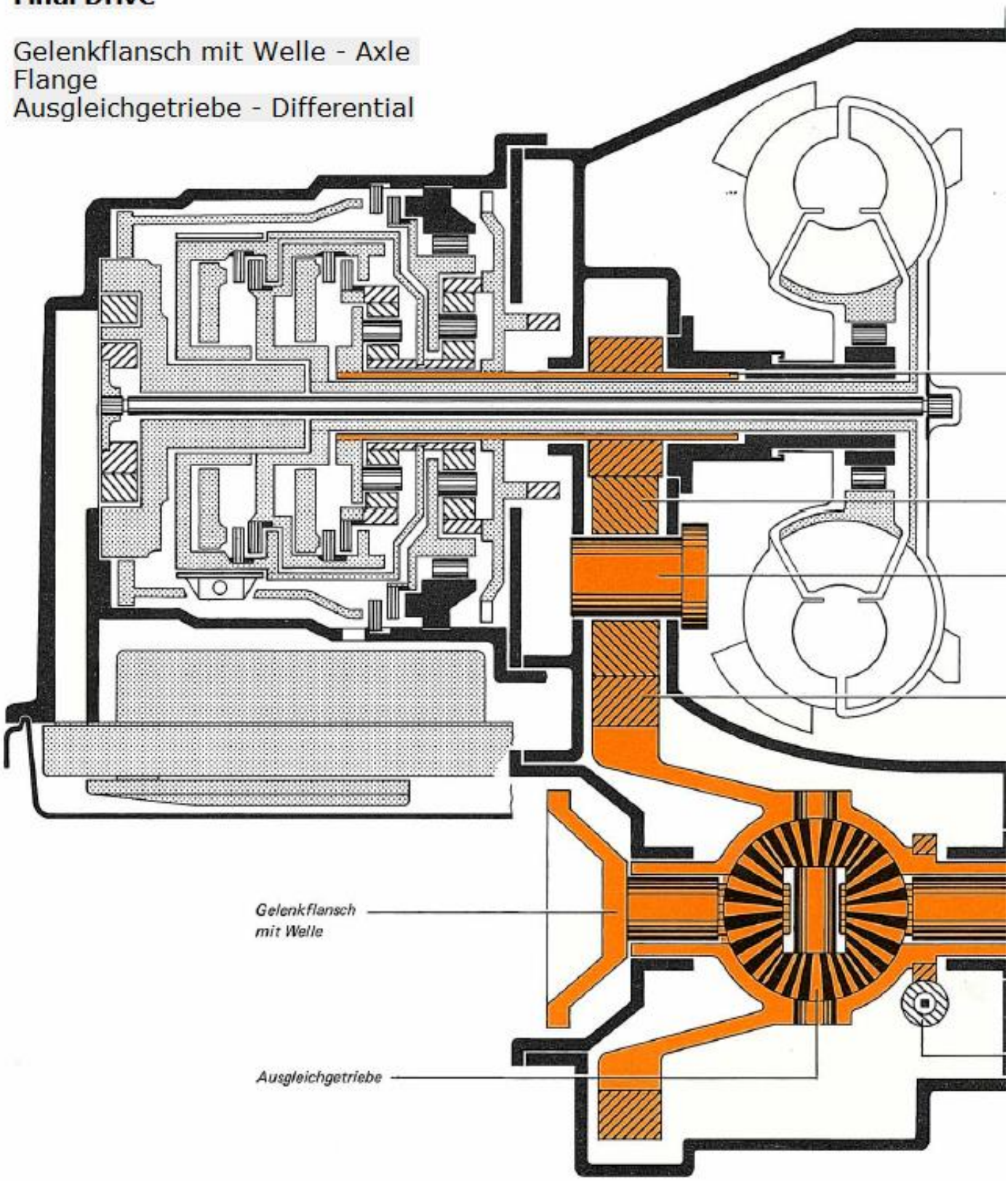

The power is transmitted via three helical gears
-The spur gear of the drive shaft
-The intermediate wheel
-The spur gear on the differential

The differential works with two large and two small differential bevel gears.
The drive for the speedometer is via a worm wheel.

Die Kraftübertragung erfolgt über drei schrägverzahnte Stirnräder

- das **Stirnrad der Triebwelle**
- das **Zwischenrad**
- das **Stirnrad am Ausgleichgetriebe**

Das Ausgleichgetriebe
arbeitet mit zwei großen und zwei kleinen Ausgleichkegelrädern.

Der Antrieb für den Geschwindigkeitsmesser
erfolgt über ein Schneckenrad.

Triebwelle mit Stirnrad

Zwischenrad

Achse für Zwischenrad

Stirnrad am Ausgleichgetriebe

Antrieb für Geschwindigkeitsmesser

Zur Schmierung des Achsantriebs
sind 0,75 l Hypoidöl erforderlich.
Es braucht nicht gewechselt zu werden!

Leitfaden

37

Triebwelle mit Stirnrad - Drive Shaft Gear [ed. Pinion Gear]
Zwischenrad - Idler Gear
Achse für Zwischenrad - Axle for Idler Gear
Stirnrad am Ausgleichgetriebe - Driven Gear for Differential [ed. Ring Gear]
Antrieb für Geschwindigkeitwmesser - Speedometer Drive Gear

To lubricate the final drive, 0.75L hypoid oil is required. It does not need to be changed!

The Components

Die Bauteile

Gelenkflansch mit Welle - Axle Flange
Stirnrad am Ausgleichgetriebe - Driven Gear for Differential [ed. Ring Gear]
Einstellscheibe für Axialspiel [Achsantrieb/Planegetriebe] - Shim for axial play [final drive / planetary gear]

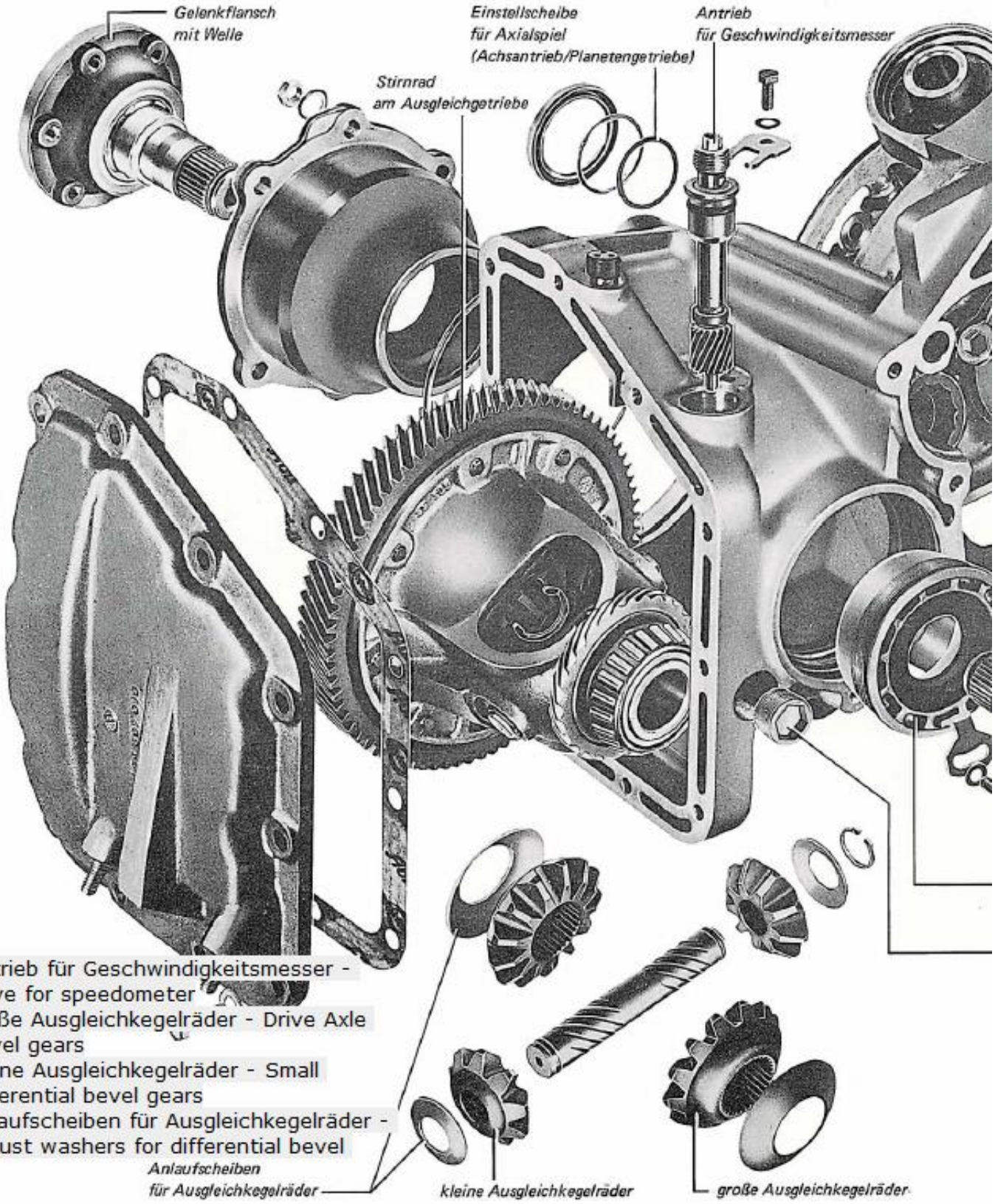

Antrieb für Geschwindigkeitsmesser - Drive for speedometer
große Ausgleichkegelräder - Drive Axle bevel gears
Kleine Ausgleichkegelräder - Small differential bevel gears
Anlaufscheiben für Ausgleichkegelräder - Thrust washers for differential bevel

Gehäuse für Achsantrieb - Final Drive Housing
Triebwelle mit Stirnrad - Drive Shaft for Gear
Einstellscheibe für Kegelrollenlager - Adjusting Shim for bearing
Freilaufstütze - Support housing for Torque Convert
Zwischenrad - Drive Idler Gear
Achse für Zwischenrad - Axle for Idler Gear
Einstellring für Kegelrollenlager - Adjusting Ring for Differential Roller Bearing
Verschlußschraube für öleinfüllung - Oil Fill Plug

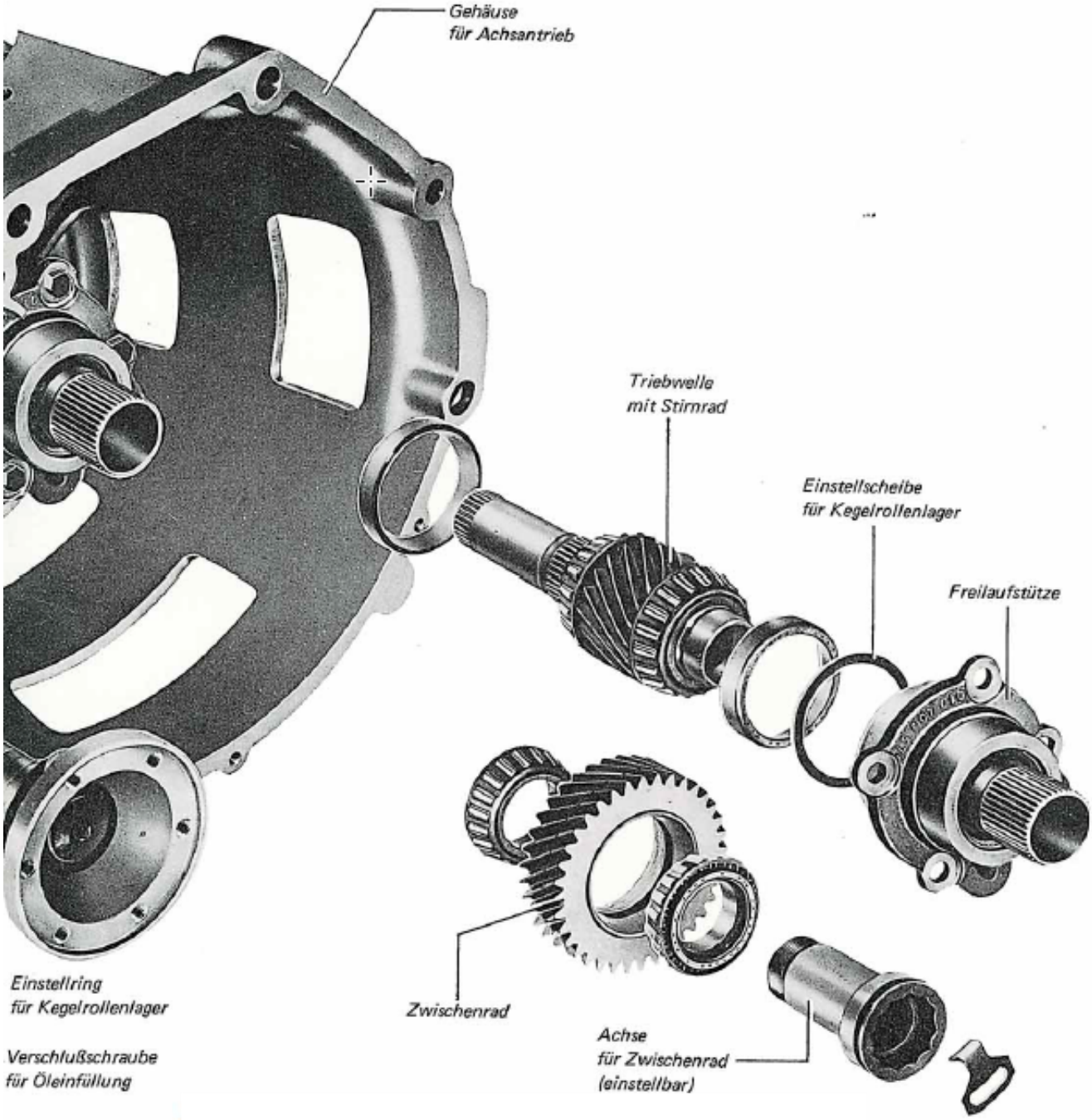

The final drive must be adjusted
- The axial play between final drive and planetary gear
-The preload of the tapered roller bearings on the drive shaft
-The preload of the tapered roller bearings on the idler gear
-The preload of tapered roller bearings on the differential gear

Leitfaden
37

Getriebesteuerung

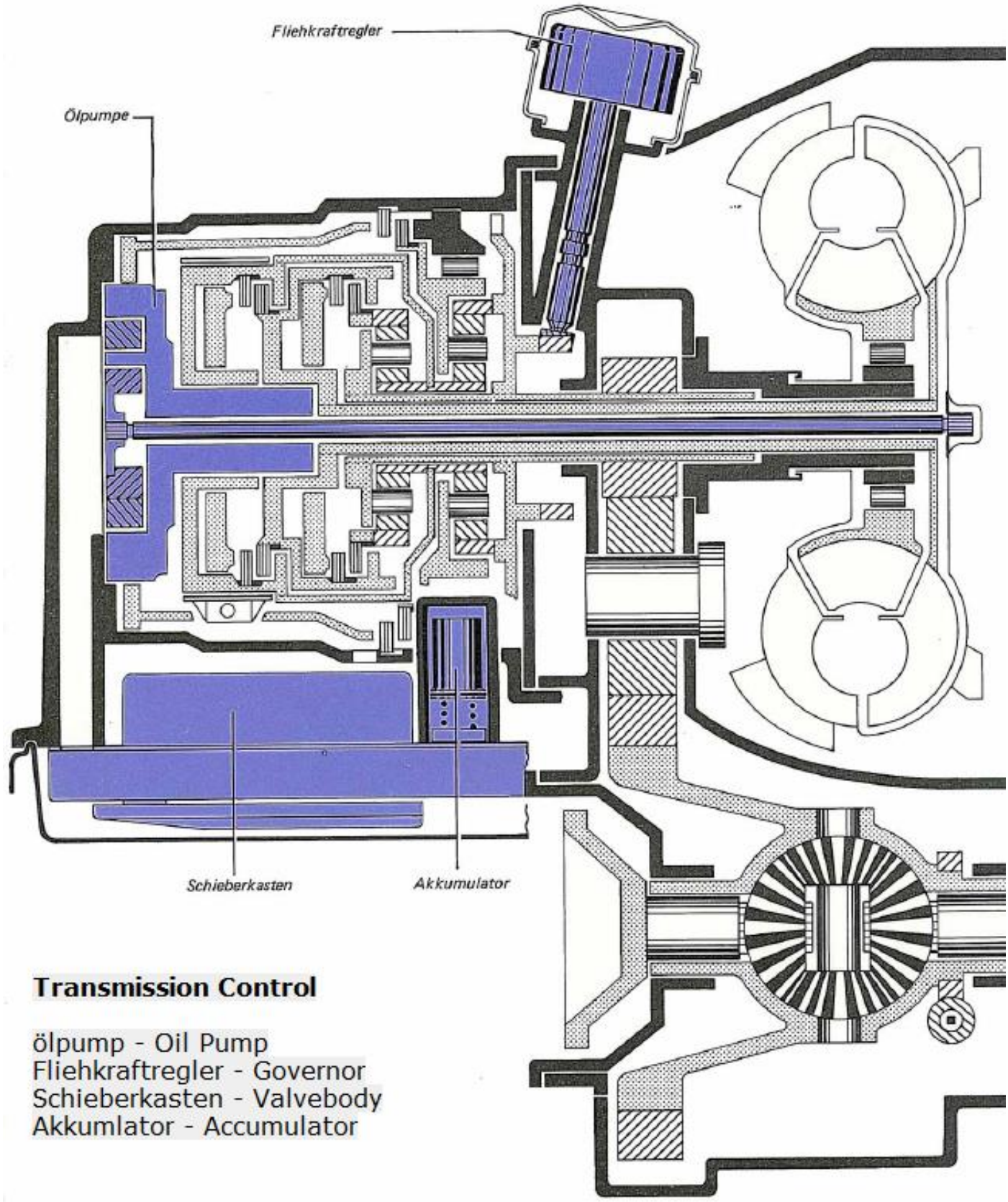

Transmission Control

ölpump - Oil Pump
Fliehkraftregler - Governor
Schieberkasten - Valvebody
Akkumlator - Accumulator

In the hydraulic control system, the automatic upshifting and downshifting of individual gears are controlled precisely at the right time.
For this purpose, the transmission control fulfills the following tasks:
-It provides the planetary gearbox and torque converter with transmission fluid as working, lubricating and cooling fluid.
-It regulates the oil pressure generated by the oil pump for the clutches, brake band, torque converter, centrifugal governor, and accumulator.
-It controls the shift times depending on the selector lever position, kickdown, engine load or driving speed by applying oil pressure to the clutches and brakes or relieving the oil pressure when shifting gears.
-It also ensures that all switching operations are soft and smooth.

The main components of the transmission control are:
-The oil pump
-The governor
-the accumulator
-the valve body

Die Ölpumpe

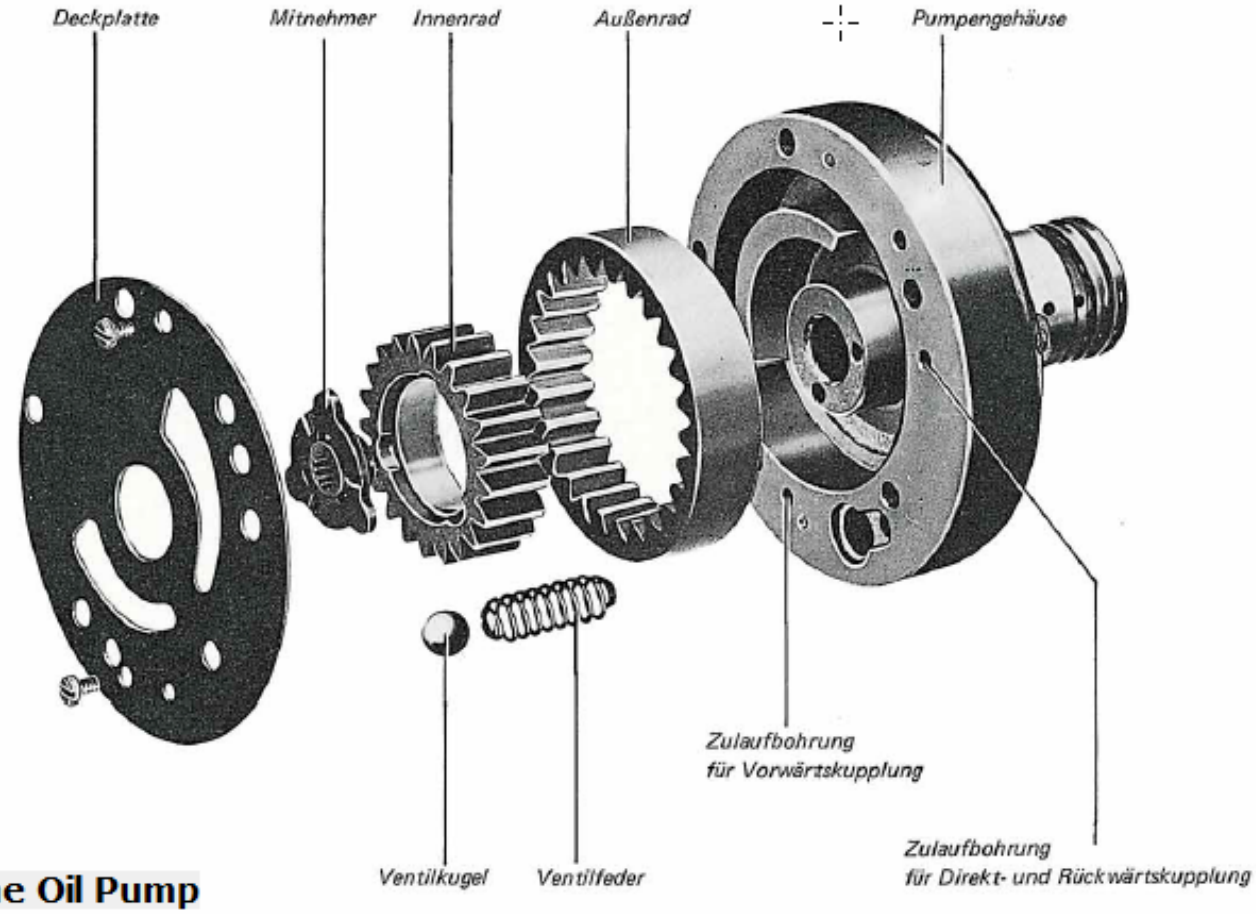

The Oil Pump

The oil pump is a sickle-wheel pump. It is bolted to the inside of the rear wall of the gear housing. The drive is from the engine via the pump shaft to the inner drive gear.
The valve ball and the spring of the pressure relief valve are located in the pump housing. They are held by the cover plate.
The clutches are mounted on the neck of the oil pump. For this reason, the inlet holes for the oil pressure from the valve body to the couplings are located in the pump housing.

Deckplatte - Cover Plate
Mitnehmer - Oil Pump Drive Plate
Innenrad - Inner Drive Gear
Außenrad - Outer Driven Gear
Pumpengehäuse - Oil Pump Housing
Zulaufbohrung für Direkt-und Rückwärtskupplung - Inlet Bore for Direct and Reverse Clutch
Zulaufbohrung für Vorwärtskupplung - Inlet Bore for Forward Clutch
Ventilfeder - Ball Check Valve Spring
Ventilkugel - Ball Check Valve

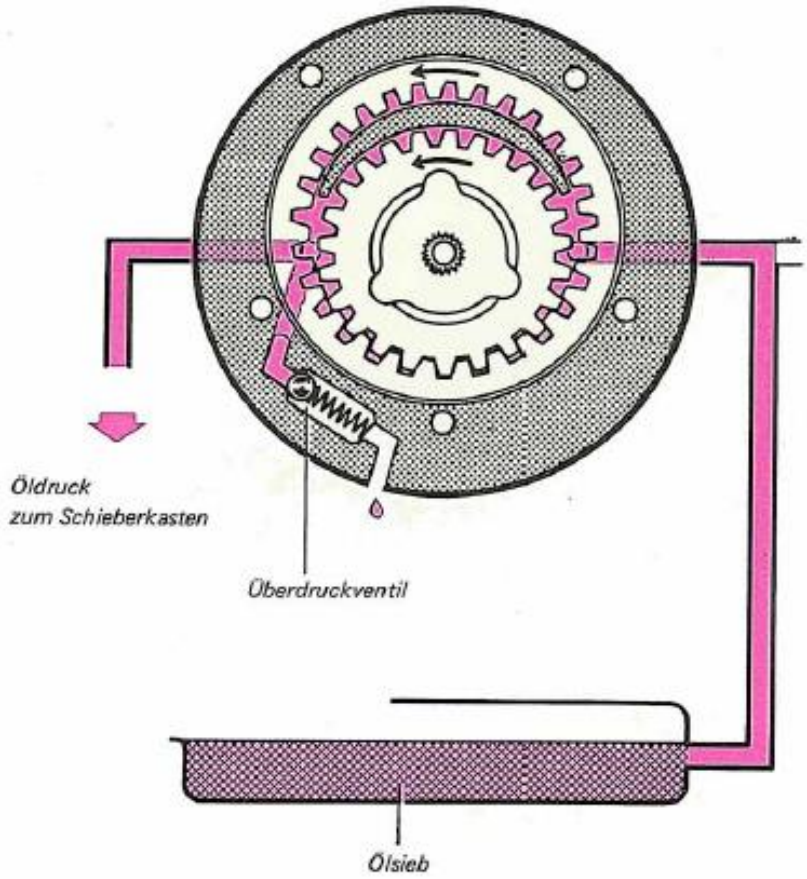

Function

When the engine is running, the oil pump sucks through the transmission filter and delivers it under pressure to the valve body. The high pressure valve opens only in reverse if the oil pressure exceeds 19-22 bar over pressure [kg / cm2].

öldruck zum Schieberkasten - Oil Pressure to Valvebody
überdruckventil - Oil Pressure Relief valve
ölsieb - Oil Filter

Der Fliehkraftregler

The Centrifugal Governor

The centrifugal governor provides an on-line pressure dependent on the driving speed. It consists of a shaft with drive pinion and an aluminum housing. In the housing is a flyweight, a slide valve, a spring with spring plate, and a pull rod. The channel plate connects the oil channels of the shaft with the oil channels of the housing. The drive is made by a worm gear, which is connected via the parking lock gear to the drive shaft.

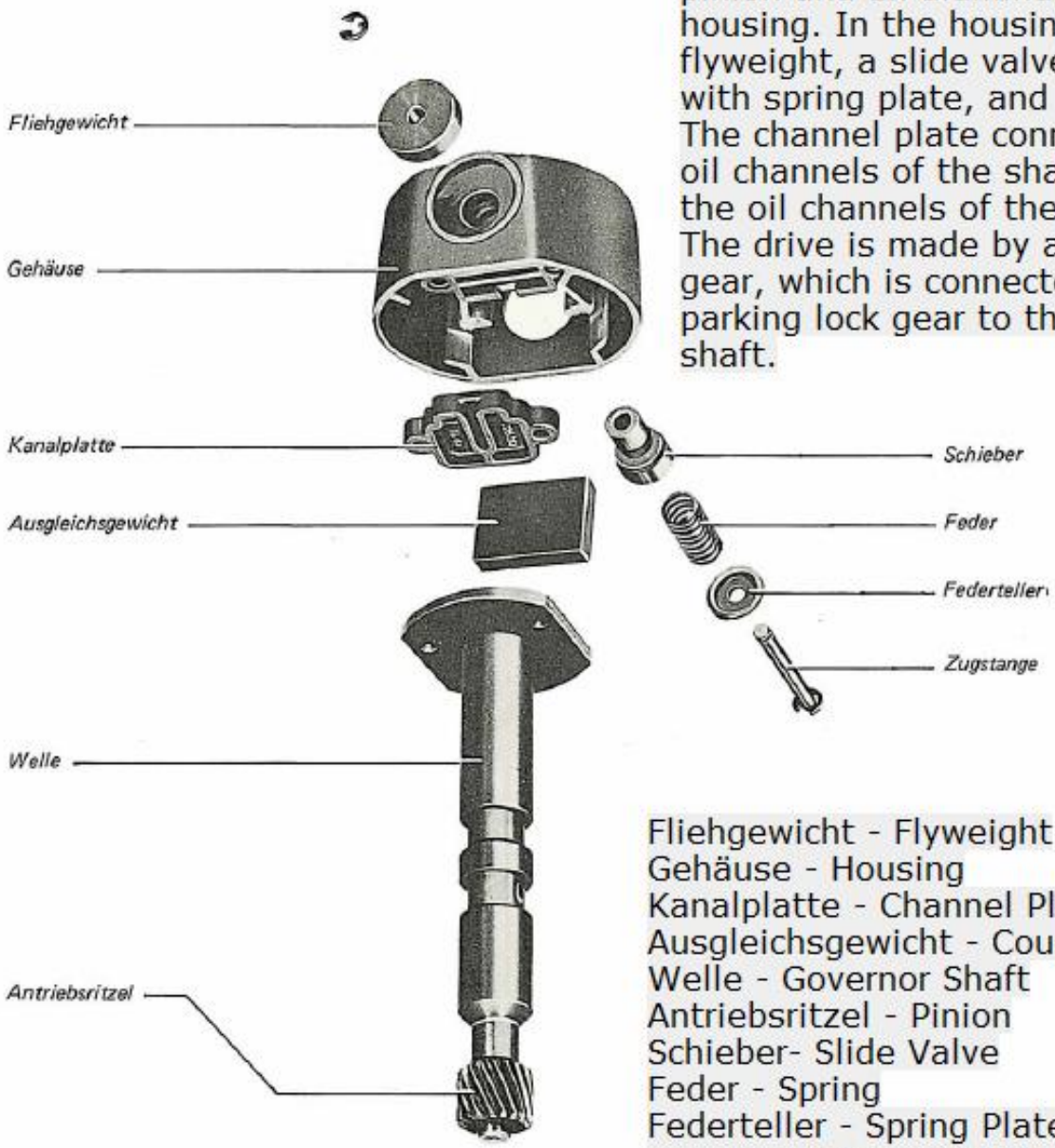

Fliehgewicht - Flyweight
Gehäuse - Housing
Kanalplatte - Channel Plate
Ausgleichsgewicht - Counterweight
Welle - Governor Shaft
Antriebsritzel - Pinion
Schieber- Slide Valve
Feder - Spring
Federteller - Spring Plate
Zugstange - connecting rod

Der Fliehkraftregler
liefert einen von der Fahrgeschwindigkeit abhängigen Öldruck (Reglerdruck).
Er besteht aus einer Welle mit Antriebsritzel
und einem Gehäuse aus Aluminium.
Im Gehäuse sind ein **Fliehgewicht**, ein **Schieber**, eine **Feder** mit **Federteller**
und eine **Zugstange** angeordnet.
Die Kanalplatte verbindet die Ölkanäle der Welle
mit den Ölkanälen des Gehäuses.

Der Antrieb erfolgt von einem Schneckenrad,
das über das Parksperrenrad
mit der Triebwelle verbunden ist.

Leitfaden
37

For cleaning, the centrifugal governor can be disassembled.
Guide 37

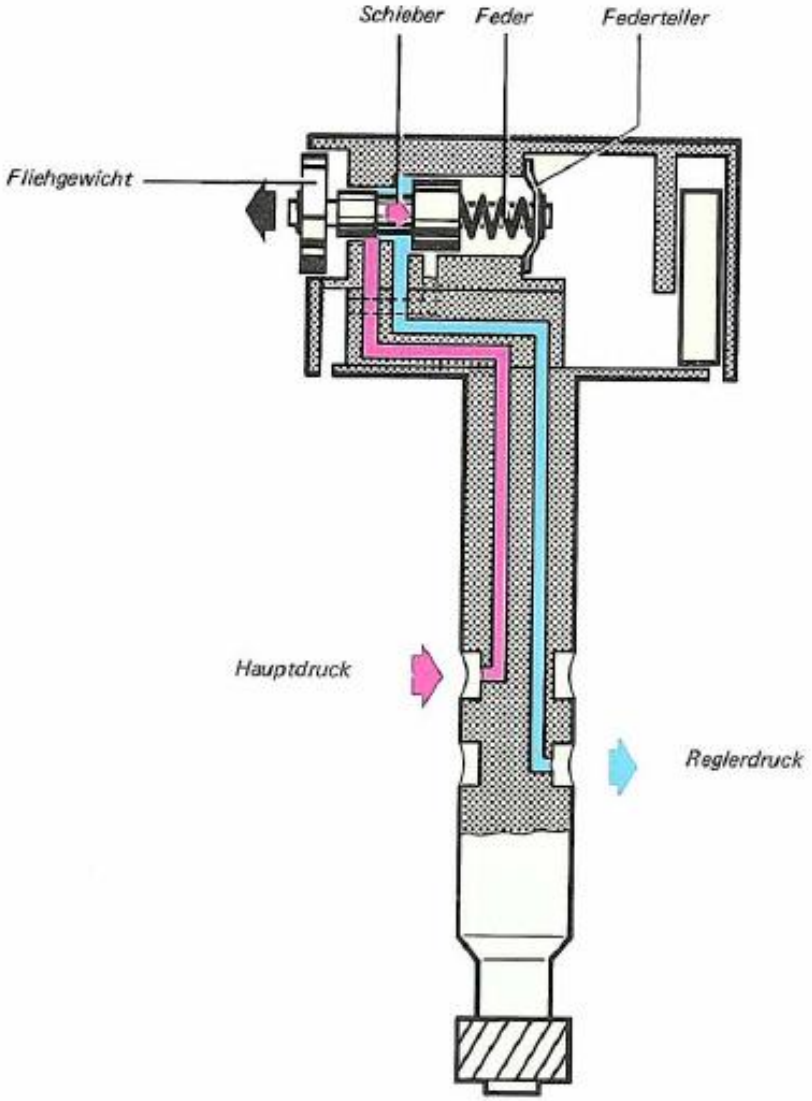

Function

At the beginning of the rotation of the centrifugal force regulator, the centrifugal weight and the valve slide outward. The driving force counteracts the main pressure of the valve and spring. These forces regulate the pressure known as governor pressure.

Fliehgewicht - Flyweight
Schieber - Slide Valve
Feder - Spring
Federteller - Spring Plate
Hauptdruck - Main Oil Pressure
Reglerdruck - Governor Oil Pressure

Der Akkumulator

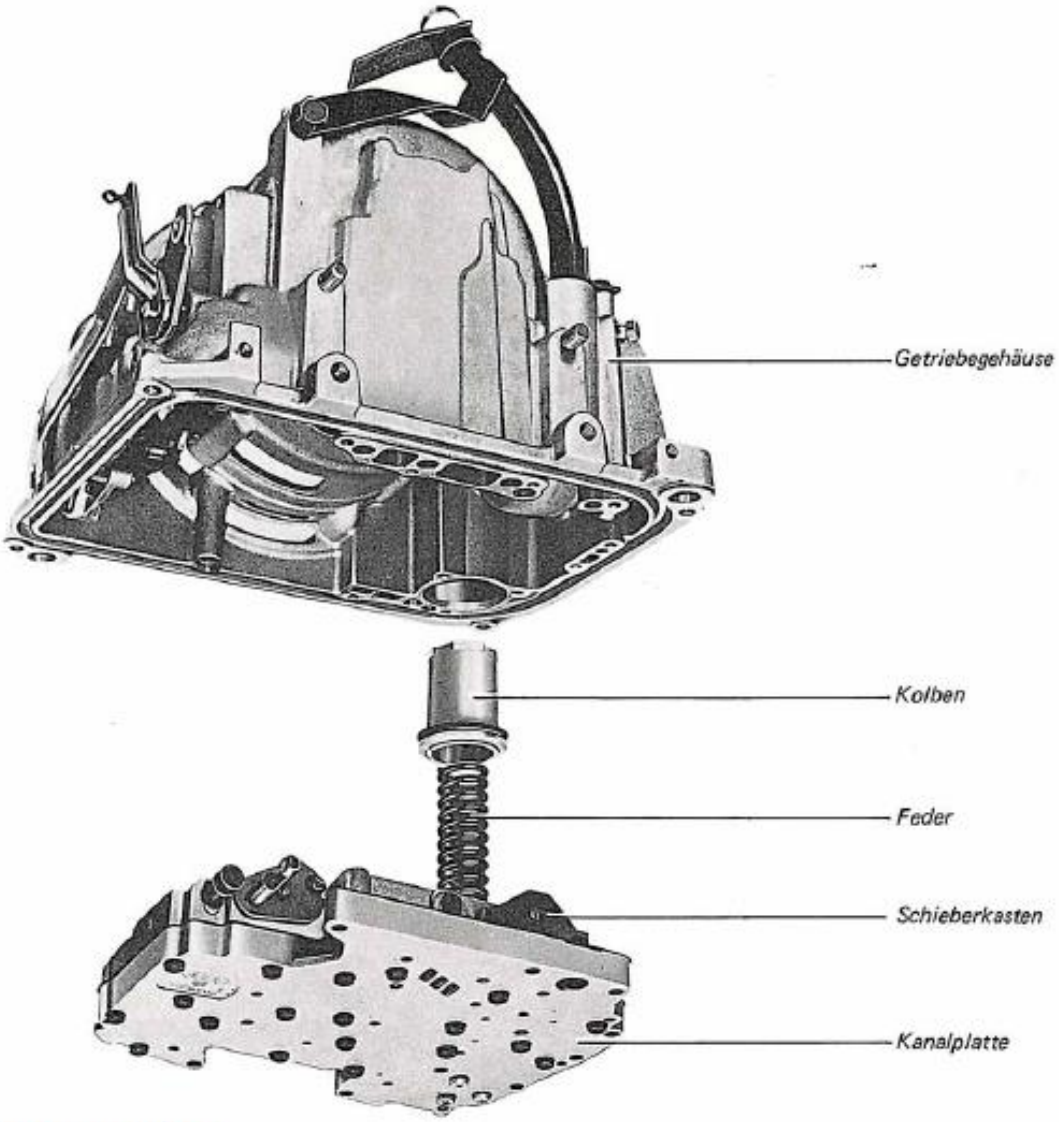

The Accumulator

The purpose of the Accumulator is to cushion the shift from 1 to 2 and during gear brake. The piston and spring are installed from below into the transmission housing and are held by the separator plate of the valve body.

Getriebegenhäuse - Transmission housing
Kolben - Piston
Feder - Spring
Schieberkasten - Valvebody
Kanalplatte - Channel Plate

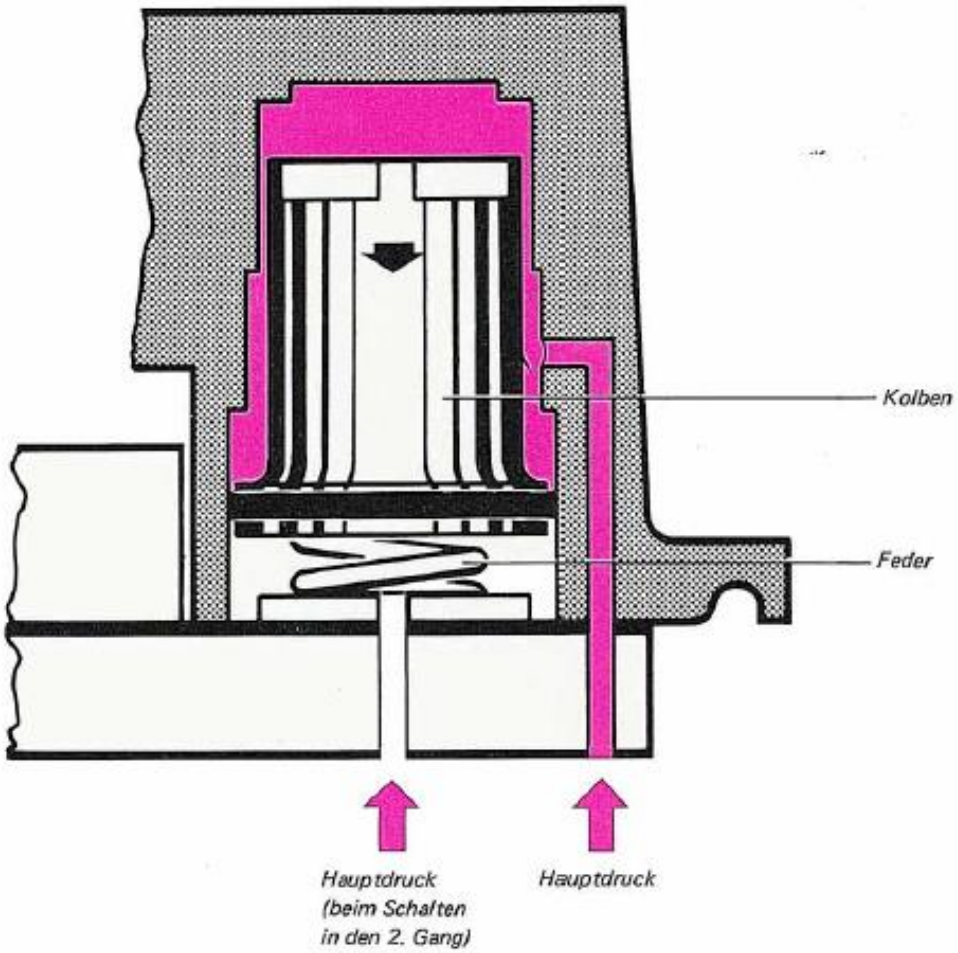

Function

The piston is depressed by the main pressure against a spring force. When switching to 2nd gear, the piston is additionally subjected to the same main pressure from below and moved upwards with the assistance of the spring force. As a result, the pressure build-up in the 2nd gear brake band is delayed as the spring relaxes in the accumulator.

Kolben - Piston
Feder - Spring
Hauptdruck [beim Schalten in den 2. Gang] - Main Pressure when shifting to 2nd Gear
Hauptdruck - Main Oil Pressure

Der Schieberkasten

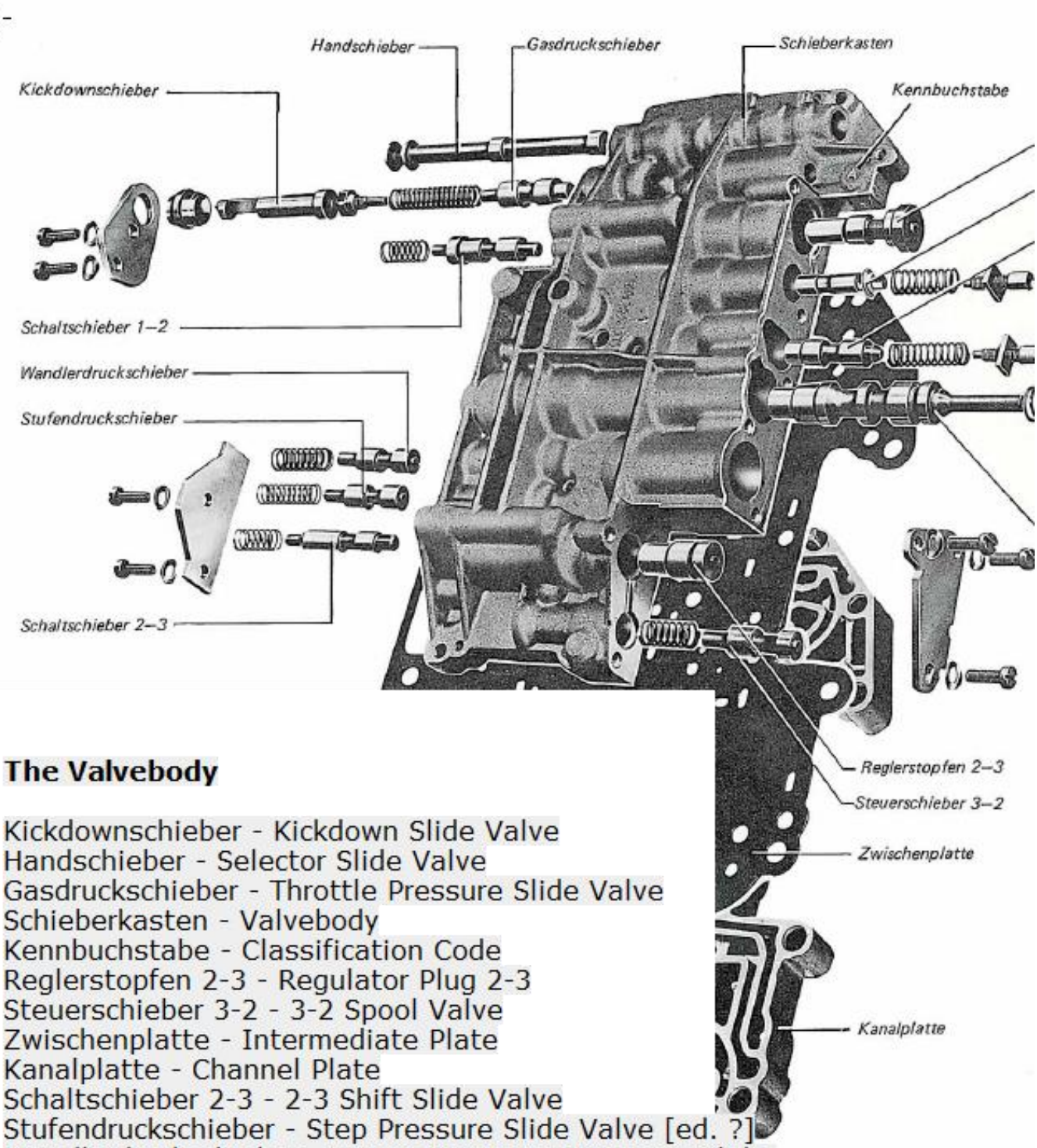

The Valvebody

Kickdownschieber - Kickdown Slide Valve
Handschieber - Selector Slide Valve
Gasdruckschieber - Throttle Pressure Slide Valve
Schieberkasten - Valvebody
Kennbuchstabe - Classification Code
Reglerstopfen 2-3 - Regulator Plug 2-3
Steuerschieber 3-2 - 3-2 Spool Valve
Zwischenplatte - Intermediate Plate
Kanalplatte - Channel Plate
Schaltschieber 2-3 - 2-3 Shift Slide Valve
Stufendruckschieber - Step Pressure Slide Valve [ed. ?]
Wandlerdruckschieber - Torque Converter Pressure Slide Valve
Schaltschieber 1-2 - 1-2 Slide Valve

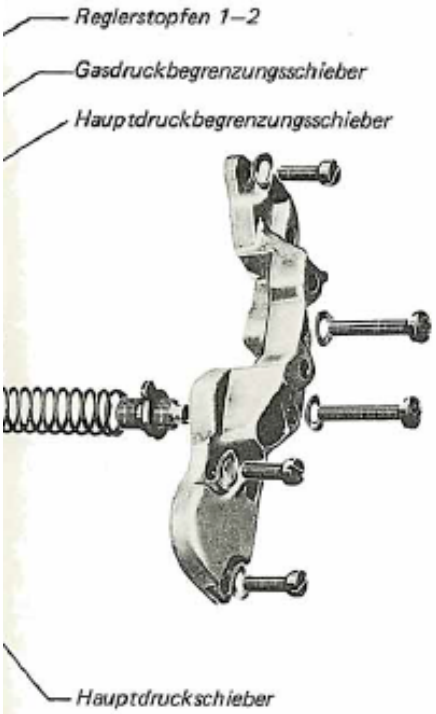

Der Schieberkasten enthält die Schieber, Federn und Ventile. Die Ölkanäle für die Schieber und Ventile sind in das Gehäuse des Schieberkastens und in die Kanalplatte eingegossen.

Zwischen Schieberkasten und Kanalplatte liegt die Zwischenplatte aus Stahlblech. Sie dient als Dichtung und verbindet durch Bohrungen nur an den gewünschten Stellen die Kanalsysteme miteinander.

The valve body contains the valves, springs, and valves. The oil passages and valves are cast in the housing of the valve body and in the channel plate.
Between the upper and lower valvebody, the intermediate plate is made of sheet steel. It serves as a seal and allows fluid to pass thru desired locations between the two valvebody halves.

Reglerstopfen 1-2 - 1-2 Regulator Plug
Gasdruckbegrenzungsschieber - Throttle Pressure Control Slide Valve
Hauptdruckbegrenzungsschieber - Main Pressure Relief Slide Valve
Hauptdruckschieber - Main Pressure Slide Valve

For cleaning, the valve body can be disassembled.

Funktionsschema Functional Schematic

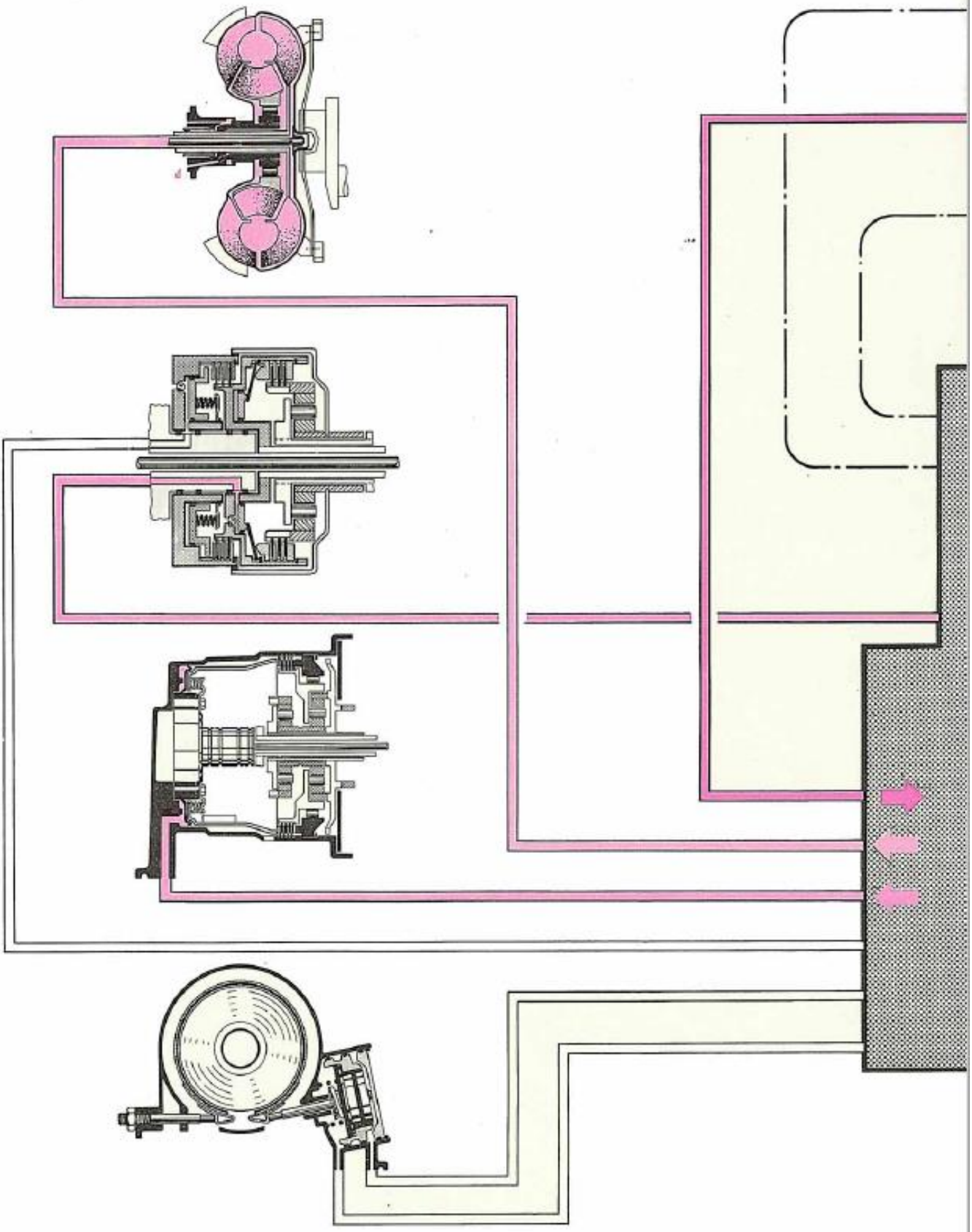

Selector lever in position 1/1st Gear

The oil pump supplies the valve body with Oil Pressure. The valve body regulates the oil pressure and this regulated pressure is known as the Main Pressure.

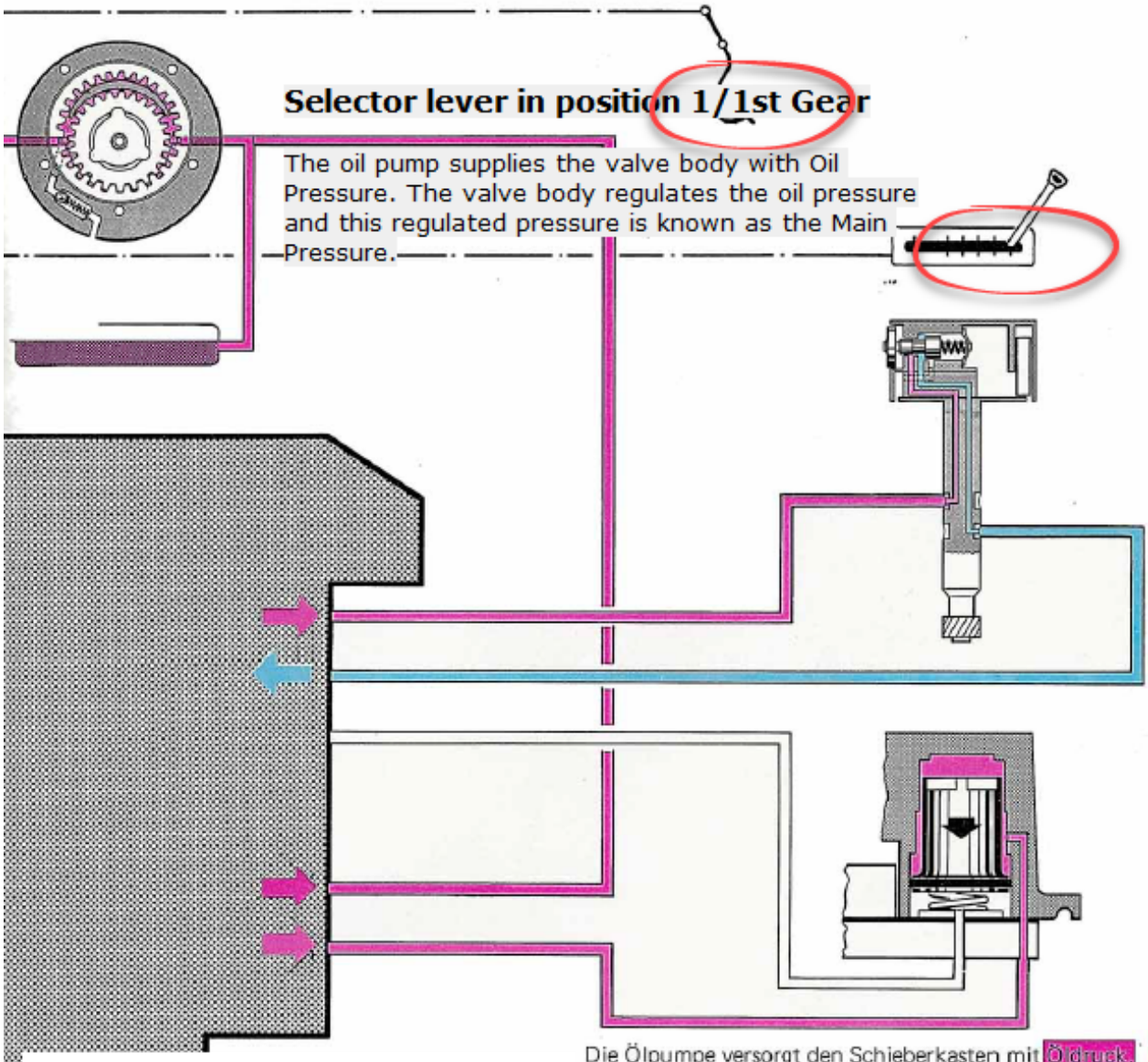

-The forward clutch
-The 1st gear and reverse clutch
-The upper piston surface of the accumulator
-The centrifugal governor.

It supplies the torque converter with Converter Pressure. The Governor Pressure does not supply pressure to the circuit.
In selector lever positions D and 2, the 1st gear and reverse brake are not supplied with main pressure. The regulator pressure, depending on the driving speed, influences the circuits via the valve body.

Die Ölpumpe versorgt den Schieberkasten mit Öldruck.
Der Schieberkasten regelt den Öldruck und gibt ihn als Hauptdruck weiter an

– die Vorwärtskupplung
– die 1.-Gang- und Rückwärtsgang-Bremse
– die obere Kolbenfläche des Akkumulators
– und den Fliehkraftregler.

Den Drehmomentwandler versorgt er mit Wandlerdruck.
Der Reglerdruck beeinflußt die Schaltung nicht.

In den Wählhebelstellungen **D** und **2** wird die 1.-Gang- und Rückwärtsgang-Bremse nicht mit Hauptdruck versorgt.

Der Reglerdruck beeinflußt, in Abhängigkeit von der Fahrgeschwindigkeit, über den Schieberkasten die Schaltungen.

Funktionsschema

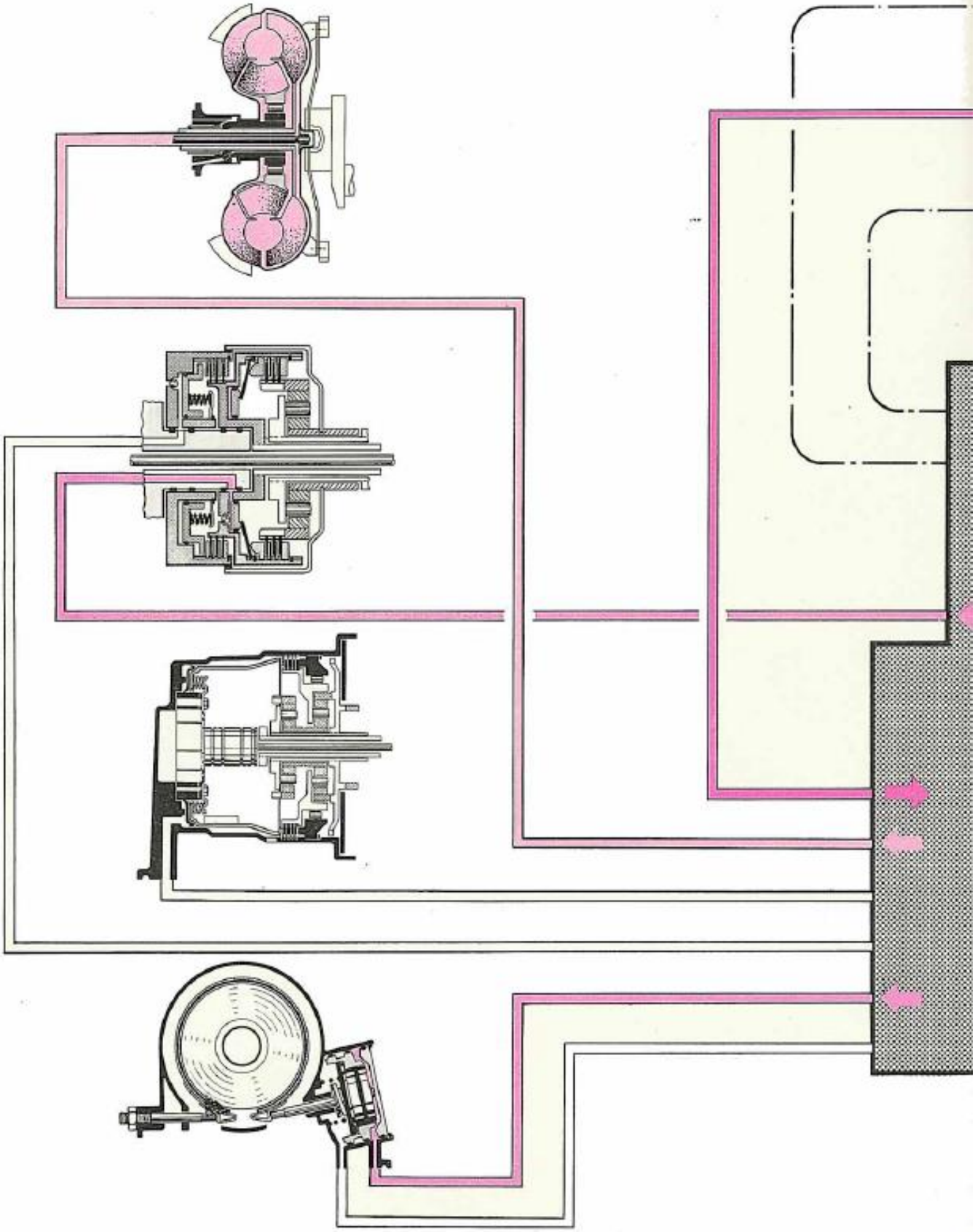

Selector lever in position 2 or D/2nd Gear

The oil pump supplies the valve body with Oil Pressure. The valve body regulates the oil pressure and this regulated pressure is known as the Main Pressure.

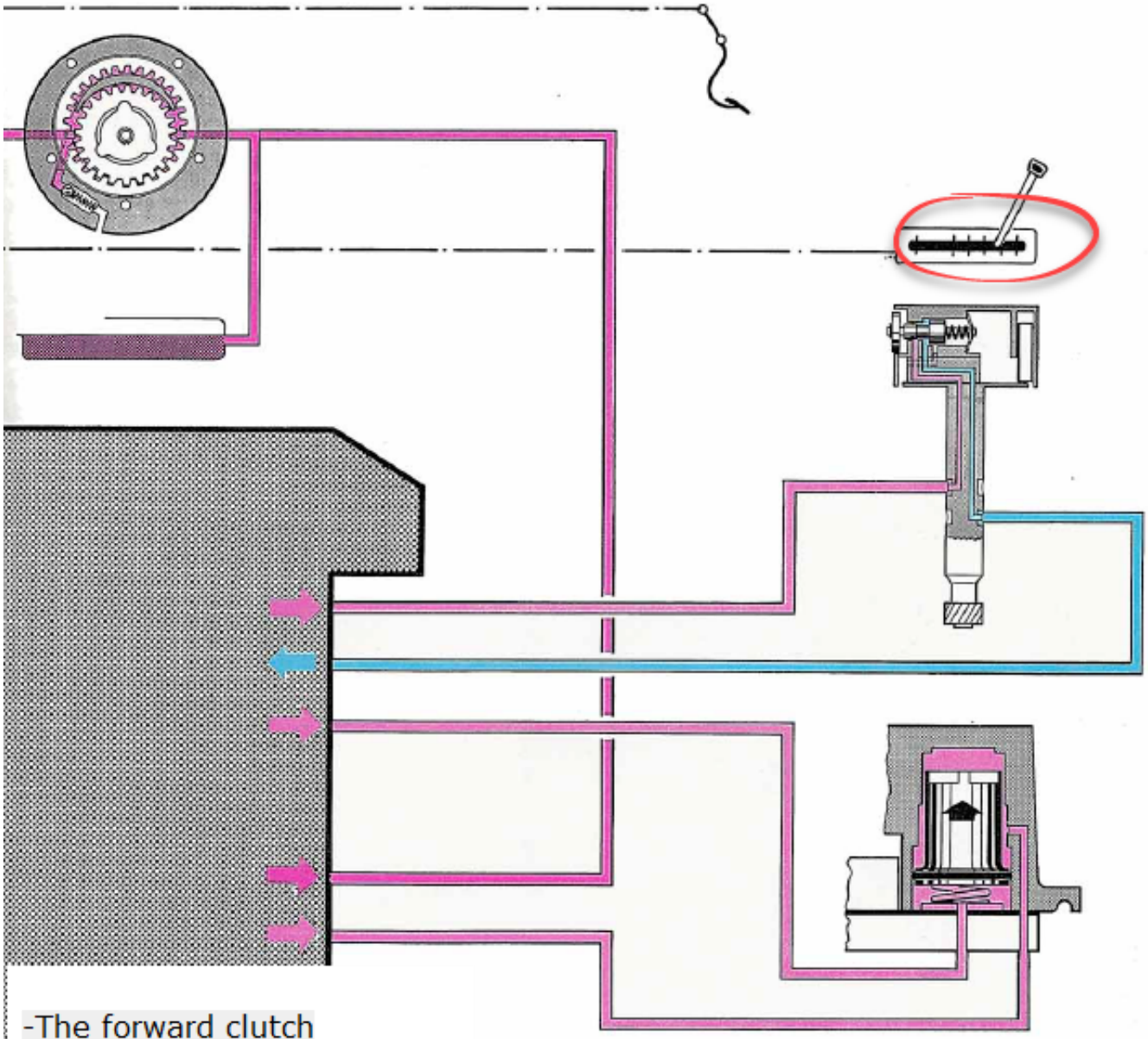

-The forward clutch
-The landing side of the 2nd gear Brake Band piston.
-The two piston surfaces of the accumulator
-The centrifugal governor.

It supplies the torque converter with Converter Pressure.
The Governor Pressure, depending on the driving speed, influences the circuits via the valve body.

Wählhebel in Stellung 2 oder D/2. Gang

Die Ölpumpe versorgt den Schieberkasten mit Öldruck.
Der Schieberkasten regelt den Öldruck
und gibt ihn als Hauptdruck weiter an

— die Vorwärtskupplung
— die Anlegeseite der 2.-Gang-Bremse
— die beiden Kolbenflächen des Akkumulators
— und an den Fliehkraftregler.

Den Drehmomentwandler versorgt er mit Wandlerdruck.

Der Reglerdruck beeinflußt,
in Abhängigkeit von der Fahrgeschwindigkeit,
über den Schieberkasten die Schaltungen.

Funktionsschema

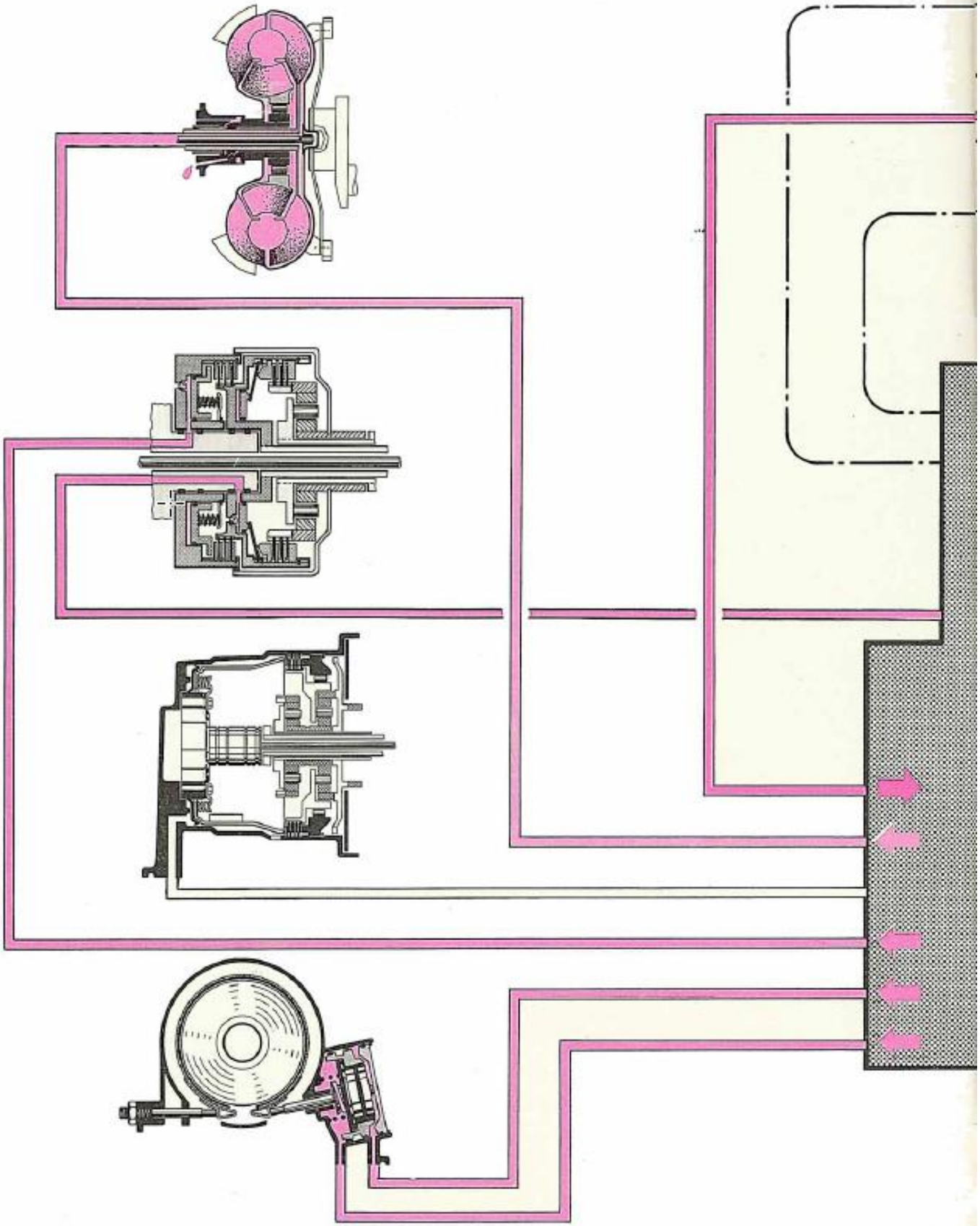

Selector lever in position D/3rd Gear

The oil pump supplies the valve body with oil pressure. The valve body regulates the Oil Pressure and this regulated pressure is known as the Main Pressure.

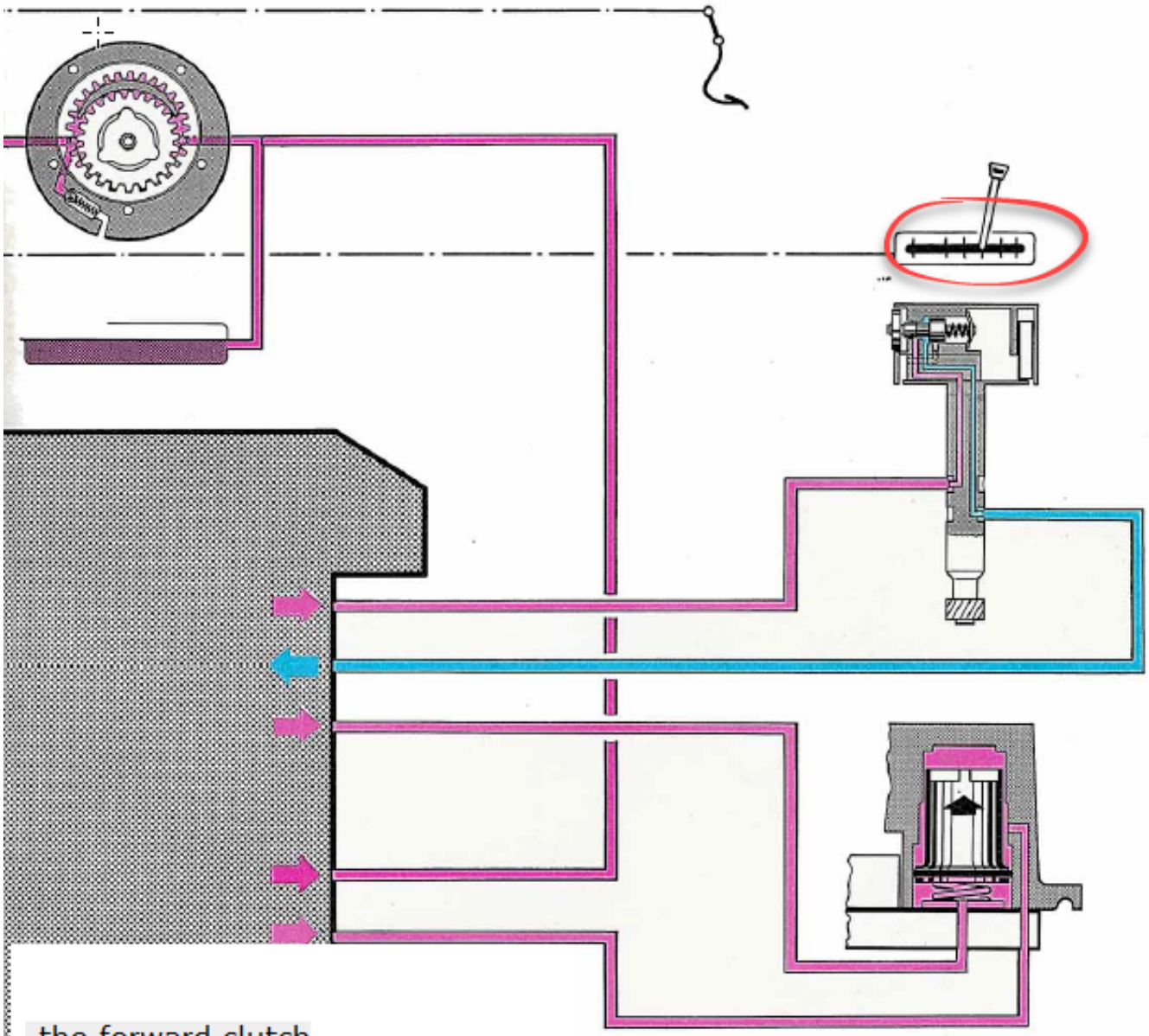

-the forward clutch
-The direct and reverse clutch-The landing and release side of the 2nd gear Brake Band piston.
- the piston end surfaces of the accumulator
-The centrifugal governor.

It supplies the torque converter with Converter Pressure.
The Governor Pressure, depending on the driving speed, influences the circuits via the valve body.

Wählhebel in Stellung D/3. Gang

Die Ölpumpe versorgt den Schieberkasten mit Öldruck.
Der Schieberkasten regelt den Öldruck
und gibt ihn als Hauptdruck weiter an

- die Vorwärtskupplung
- die Direkt- und Rückwärtskupplung
- die Anlege- und Löseseite der 2.-Gang-Bremse
- die beiden Kolbenflächen des Akkumulators
- und den Fliehkraftregler.

Den Drehmomentwandler versorgt er mit Wandlerdruck.

Der Reglerdruck beeinflußt,
in Abhängigkeit von der Fahrgeschwindigkeit,
über den Schieberkasten die Schaltungen.

Funktionsschema

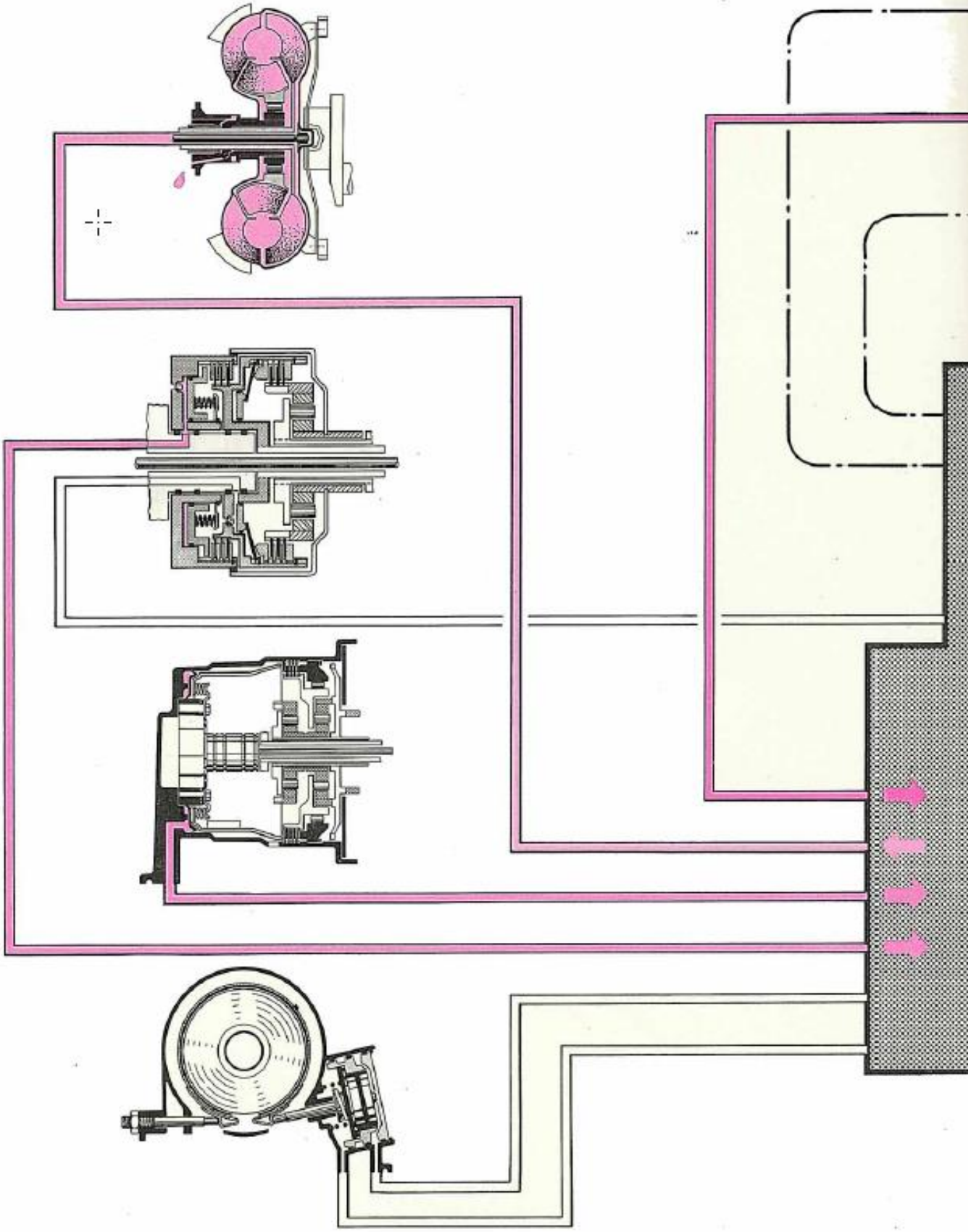

Selector lever in position R/Reverse

The oil pump supplies the valve body with increased Oil Pressure [3 times the regulated pressure]. The valve body continues to use the increased oil pressure to apply:

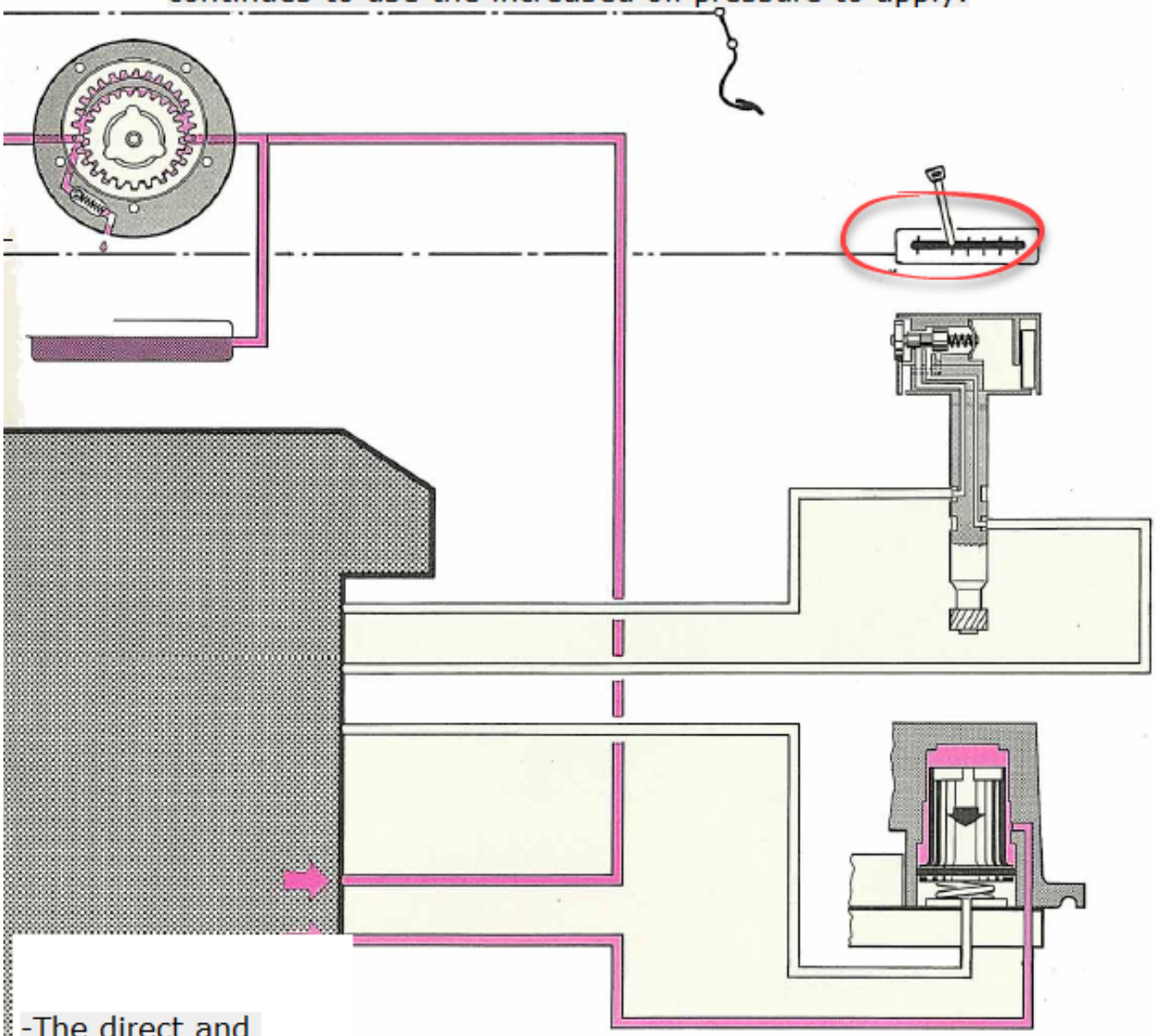

-The direct and reverse clutch
-The 1st gear and reverse brake
-The upper piston surface of the accumulator.

It supplies the torque converter with Converter Pressure. The centrifugal governor is not used.

Wählhebel in Stellung R/Rückwärtsgang

Die Ölpumpe versorgt den Schieberkasten mit erhöhtem Öldruck (3facher Wert). Der Schieberkasten gibt den erhöhten Öldruck weiter an

- die Direkt- und Rückwärtskupplung
- die 1.-Gang- und Rückwärtsgang-Bremse
- und die obere Kolbenfläche des Akkumulators.

Den Drehmomentwandler versorgt er mit Wandlerdruck.

Der Fliehkraftregler ist nicht in Funktion.

You now know the most important thing about the automatic transmission.
Of course, there are a number of interesting details that have not yet been dealt with.
These are, for example, the functions of the valves and valves in the valve body.
If you also want to know about it, then take a look at the last two pages. Here you will find a functional diagram of the valve body with essential valves as well as a description of their various tasks.

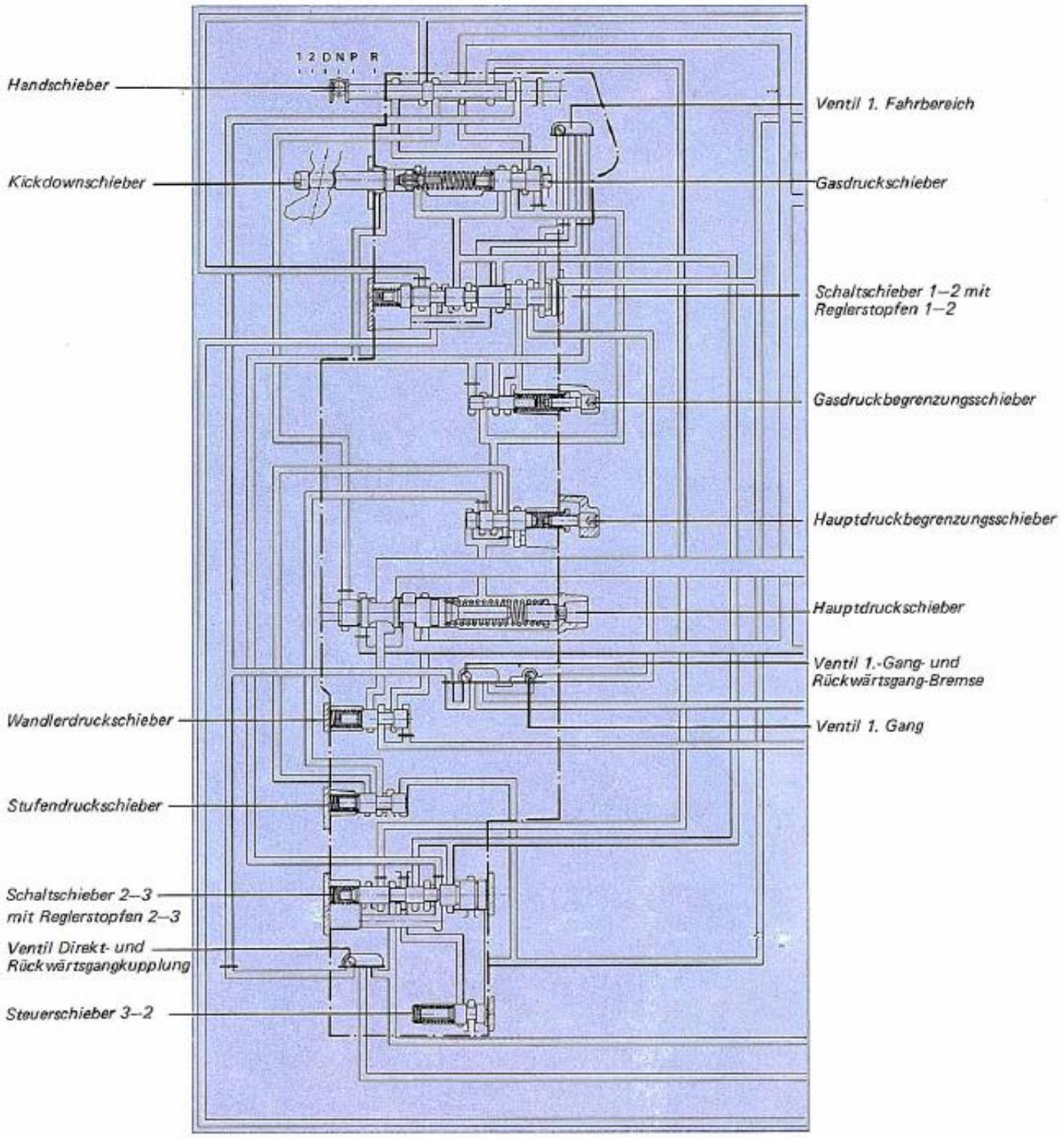

The Selector slide valve [Handschieber] position is determined by the selector lever. It directs the main pressure to the parts of the valve body to apply the proper clutch or band for the planetary gear set.

The kickdown slide valve [Kickdownschieber] acts when the accelerator pedal pressed fully, will force a downshift. This circuit cannot take place at higher speeds.

The throttle control slide valve [Gasdruckschieber] generates an oil pressure called Throttle Pressure. This pressure is dependent on the throttle position of the engine. It's used to control of the main pressure and the switching points based on load of the engine.

The 1-2 shift valve [Schaltschieber 1-2] along with the regulator stop 1-2 [Reglerstopfen 1-2] switches depending on the height of the regulator [ed. The amount of the governor pressure?] and the Throttle pressure for the 1st to 2nd gear change by relieving the feed side of the piston of the 2nd gear brake band or applied with main pressure. The regulator plug prevents over revving of the engine.

The Throttle pressure limiting slide valve [Gasdruckbegrenzungsschieber] adjusts the Throttle pressure acting on the two slide valves 1-2 and 2-3.

The main pressure limiting slide [Hauptdruckbegrenzungsschieber] limits the Throttle pressure for the spring chamber of the main pressure slide valve valve.

The main pressure slide valve [Hauptdruckschieber] controls the oil pressure for the clutches, brakes and other transmission control.

The converter pressure slide valve [Wandlerdruckschieber] controls the oil pressure for the torque converter.

The step pressure slide valve [Stufendruckschieber] controls the partial piston surface of the main pressure limiting slide valve [Hauptdruckbegrenzungsschieber].

The slide valve 2-3 [Schaltschieber 2-3] with regulator stop 2-3 [Reglerstopfen 2-3] switches depending on the height of the regulator [ed. The amount of the governor pressure?] and the Throttle pressure for the 2nd to 3rd gear change.
The control slide valve 3-2 [Steuerschieber 3-2] ensures a smooth switch back from 3rd to 2nd gear.

The Ball check valve 1. Driving range [Ventil 1. Fahrbereich]
When the shift lever is in position 1, it will connect the slide valve 1-2 [Schaltschieber 1-2] and the regulator stop 1-2 [Reglerstopfen 1-2] with main pressure. When the shift lever is in D or 2, it connects the slide valve 1-2 [Schaltschieber 1-2] to Throttle pressure.

The 1st gear ball check valve and reverse brake [Das Ventil 1-Gang-und Rückwärtsgang-Bremse].
Connects the hydraulic circuit of the 1st gear and reverse clutch
-In selector lever position 1, with the main pressure line from slide valve 1-2 [Schaltschieber 1-2] via 1st gear ball check valve [Ventil 1. Gang].
-in selector lever position R, from the Selector slide valve [Handschieber].

The 1st gear ball check valve [Ventil 1. Gang].
1st gear allowed when inserting in selector lever 1, a slow application of the 1st gear and reverse gear brake, and when taking the selector lever out of gear, a quick release.

The direct ball check valve and reverse clutch [Das Ventil Direkt-und Rückwärtskupplung]
Connects the hydraulic circuit for direct and reverse engagement
- In 3rd gear with the main pressure line from the slide valve 2-3 [Schaltschieber 2-3]
- In reverse gear with the line from the Selector slide valve. [Handschieber].

Volkswagenwerk AG Wolfsburg
Personalentwicklung und Schulung
Nur für den internen Gebrauch gemäß den
Richtlinien der Volkswagenwerk AG
September 1974
400/280.815.00